Jan. 2009

SERVICE MANUAL ADDENDUM

ID–1

CONTENTS

REPLACEMENT PAGE 5-5
PARTS LIST 1
BOARD LAYOUTS 11
VOLTAGE DIAGRAM 13

5-3 TRANSMITTER ADJUSTMENT

ADJUSTMENT		ADJUSTMENT CONDITION	MEASUREMENT		VALUE	ADJUSTMENT	
			UNIT	LOCATION		UNIT	ADJUST
YGR CURRENT [FPGA D.C. voltage adjustment /DV I]	1	• Preset R1086 and R1087 maximum counterclockwise. • Preset "IQ Direct-current output" ON. • Operating freq. : 1300.00 MHz • Mode : DV mode • Connect an RF power meter or 50 Ω dummy load to the antenna connector. • Transmitting	Rear panel	Connect an ammeter between the DC power supply and ID-1.	100 mA higher from the preset position.	MAIN unit	R1087
	2				100 mA higher from step 1.	MAIN unit	R1086
REFERENCE FREQUENCY [REF Crystal adjustment]	1	• Operating freq. : 1300.00 MHz • Mode : FM mode • Connect an RF power meter or 50 Ω dummy load to the antenna connector. • Transmitting	Rear panel	Loosely couple a frequency counter to the antenna connector.	1300.0000 MHz	PC screen	[REF Crystal adjustment]
FM CARRIER [FPGA D.C. voltage adjustment /FM I]	1	• Operating freq. : 1300.00 MHz • Mode : FM mode • Connect an RF power meter or 50 Ω dummy load to the antenna connector. • Transmitting	MAIN unit	Connect a digital multimeter or an oscilloscope to the check point "CP30".	The same voltage that during in DV mode (TX) at the check point "CP30".	PC screen	[FPGA D.C. voltage adjustment /FM I]
[FPGA D.C. voltage adjustment /FM Q]	2	• Transmitting			The same adjustment as step 1, if need.	PC screen	[FPGA D.C. voltage adjustment /FM Q]
OUTPUT POWER [TX output adjustment]	1	• Operating freq. : 1300.00 MHz • Mode : FM mode • TX power : High • Transmitting	Rear panel	Connect an RF power meter to the antenna connector.	11 W	MAIN unit	R1251
FM DEVIATION [FM modulation adjustment]	1	• Operating freq. : 1270.00 MHz • Mode : FM mode • Connect an audio generator to the [MIC] connector and set as : 1.0 kHz/20 mVrms • Set a Modulation analyzer as: HPF : OFF LPF : 20 kHz De-emphasis : OFF Detector : (P–P)/2 • Transmitting	Rear panel	Connect a modulation analyzer to the antenna connector through an attenuator.	±4.35 kHz	MAIN unit	R1704
DSP INPUT LEVEL [DSP input level adjustment]	1	• Operating freq. : 1270.00 MHz • Connect an audio generator to the [MIC] connector and set as : 1.0 kHz/20 mVrms • Connect an RF power meter or 50 Ω dummy load to the antenna connector. • Transmitting	LOGIC-1 unit	Connect an oscilloscope to the check point "CP207".	IC1 (LOGIC-1) is; "uPD9930" ->750 mVp-p "AD73311" ->2.1 Vp-p	MAIN unit	R1707

PARTS LIST

[LOGIC-1 UNIT]

REF NO.	PARTS NO.	DESCRIPTION	M.	H/V LOCATION
IC1	1130011631	S.IC AD73311ARSZ	T	9.6/31.9
IC2	1130010920	S.IC AMBE-2020	T	31.8/51
IC3	1130006891	S.IC TC7S04FU(TE85R,F)	B	30.7/46.1
IC4	1180002371	S.REG R1111N321B-TR-F	T	33.2/38.7
IC50	1140010091	S.IC UPD70F3102AGJ-33-8EU-A	T	61.6/54
IC51	1130007281	S.IC TC7S32FU(TE85R,F)	T	45.3/65.2
IC52	1110005731	S.IC S-80928CNMC-G8Y-G	B	54.3/42.2
IC53	1130007111	S.IC TC7W04FU(TE12L,F)	T	44.6/62.1
IC54	1140008650	S.IC HN58X2464TI	T	45.2/56.4
IC55	1130010630	S.IC SN74AHCT541PWR	B	43/36.3
IC56	1190001340	S.IC M62334FP 600C	T	59.8/37.1
IC57	1190001340	S.IC M62334FP 600C	T	68.2/37
IC58	1110002861	S.IC TA75S393F(TE85R,F)	B	4/48.1
IC100	1130010620	S.IC SN74AHC541PWR	B	109.6/49.6
IC101	1130007111	S.IC TC7W04FU(TE12L,F)	T	106.1/56.2
IC102	1130008711	S.IC TC7SET04FU(T5L,JF)	T	110.9/55.3
IC103	1130010630	S.IC SN74AHCT541PWR	T	108.9/49.3
IC104	1120002840	S.IC RTL8019AS-LF <GMI>	T	87.7/39.1
IC105	1130010581	S.IC UPD43256BGW-70LL-9JL-A	T	108.7/37.2
IC150	1110005430	S.IC CMX589AD5	T	98.2/11.4
IC151	1130008711	S.IC TC7SET04FU(T5L,JF)	T	89.1/16.9
IC152	1130004201	S.IC TC4S66F(TE85R,F)	B	103.9/7.5
IC153	1130004201	S.IC TC4S66F(TE85R,F)	B	100.9/13
IC200	1120002871	S.IC XCS20XL-4TQG144I	T	32.1/18.9
IC201	1130006891	S.IC TC7S04FU(TE85R,F)	B	36.5/54.2
IC202	1130008361	S.IC TC7SHU04FU(TE85L,JF)	T	25.6/32.9
IC203	1130006891	S.IC TC7S04FU(TE85R,F)	B	35.4/31.1
IC300	1110005290	S.IC NJM2115V-TE1-#ZZZB	T	58.6/19.4
IC301	1110005290	S.IC NJM2115V-TE1-#ZZZB	T	57.2/30.5
IC302	1110005290	S.IC NJM2115V-TE1-#ZZZB	T	68.4/20.7
IC350	1130006221	S.IC TC4W53FU(TE12L,F)	T	84.4/19.1
IC351	1110003780	S.IC NJM2902V-TE1-#ZZZB	T	90.6/23.1
IC352	1130006221	S.IC TC4W53FU(TE12L,F)	T	81.2/23.6
IC353	1130008561	S.IC TC75S51F(TE85L,F)	T	100.8/23.8
IC354	1130006221	S.IC TC4W53FU(TE12L,F)	T	104.8/18.8
IC355	1110002751	S.IC TA75S01F(TE85R,F)	B	87.5/17.5
IC500	1180001071	S.IC TA7805F(TE16L,Q)	T	86.3/73.9
IC502	1180002391	S.REG S-812C33AMC-C2N-G	T	92.8/66
IC503	1110005440	S.IC NJM2374AM-TE1	T	110.5/70.6
IC504	1180002391	S.REG S-812C33AMC-C2N-G	T	64.3/74.8
IC550	1130012051	S.IC FT232BL	T	11.8/61.4
IC551	1130009570	S.IC BR93LC46F-WE2	T	12.8/52.2
IC553	1130007281	S.IC TC7S32FU(TE85R,F)	B	10.4/49
Q50	1530002280	S.TRA 2SC4081 T106 S	B	8.3/43.6
Q51	1510000771	S.TRA 2SA1586-GR(TE85L,F)	B	5.7/43.9
Q52	1590000430	S.TRA DTC144EUA T106	B	7.9/47.6
Q100	1590000430	S.TRA DTC144EUA T106	T	79/26.4
Q101	1590001980	S.TRA XP4315(TX)	B	42/7.9
Q102	1590001980	S.TRA XP4315(TX)	B	39.5/7.9
Q103	1590000430	S.TRA DTC144EUA T106	B	67.7/6.4
Q150	1590001400	S.TRA XP1214(TX)	T	91.3/12.8
Q151	1590001400	S.TRA XP1214(TX)	B	97.2/6.4
Q153	1590000430	S.TRA DTC144EUA T106	B	76.3/24.3
Q154	1590000430	S.TRA DTC144EUA T106	B	106.3/12.5
Q155	1590000430	S.TRA DTC144EUA T106	B	74.5/20.6
Q156	1590000430	S.TRA DTC144EUA T106	B	72/22.4
Q400	1590000430	S.TRA DTC144EUA T106	B	73.3/14.4
Q500	1520000201	S.TRA 2SB798-T2-AZ DK	T	80.3/63.6
Q501	1590000430	S.TRA DTC144EUA T106	T	76.6/66.1
Q502	1530002280	S.TRA 2SC4081 T106 S	T	67.9/72.3
Q503	1520000201	S.TRA 2SB798-T2-AZ DK	B	74.3/68.5
Q504	1530002280	S.TRA 2SC4081 T106 S	B	70/74.5
Q550	1590000430	S.TRA DTC144EUA T106	B	15.5/49.9
D50	1790001240	S.DIO MA2S728-(TX)	T	59.3/66.6
D51	1750000550	S.DIO 1SS355 TE-17	B	1.4/48.1
D52	1750000550	S.DIO 1SS355 TE-17	B	50.1/60.5
D53	1750000550	S.DIO 1SS355 TE-17	T	46.6/59.5
D54	1750000550	S.DIO 1SS355 TE-17	B	48.1/66.7
D55	1730002280	S.ZEN MA8091-M(TX)	T	12.7/43.9
D201	1790001240	S.DIO MA2S728-(TX)	B	39.6/51.1
D350	1720000361	S.DIO HSU88TRF-E	T	85.3/24.3
D351	1720000361	S.DIO HSU88TRF-E	T	87.7/19.4
D501	1790000671	S.DIO SB07-03C-TB-E	T	72.2/69.6
D502	1750000550	S.DIO 1SS355 TE-17	T	71.2/72.3
D503	1790000671	S.DIO SB07-03C-TB-E	T	99.4/65.9
D504	1790000671	S.DIO SB07-03C-TB-E	B	110.2/74.1
X50	6050011290	S.XTA CR-715 SX-1302 6 MHz	T	44.4/47.2
X100	6050011300	S.XTA CR-716 SX-1302 20 MHz	T	99.1/55.5
X200	6050011240	S.XTA CR-708 DSX631S 16.384 MHz	T	19/34.3
X201	6050011700	S.XTA CR-760 DSX531S 9.8304 MHz	T	37.2/33.3
X550	6050011290	S.XTA CR-715 SX-1302 6 MHz	T	3.4/55.5
L50	6200005741	S.COI ELJRE 47NGFA	T	65.2/67.6
L51	6200005741	S.COI ELJRE 47NGFA	T	48.4/46
L100	6200005741	S.COI ELJRE 47NGFA	B	111.3/56
L101	6200005741	S.COI ELJRE 47NGFA	B	111.3/57.3
L102	6200005741	S.COI ELJRE 47NGFA	T	87/52.4
L103	6200005741	S.COI ELJRE 47NGFA	B	108.5/27.6
L114	6200006991	S.COI ELJRE 56NGFA	B	11.9/70.6
L115	6200006991	S.COI ELJRE 56NGFA	B	13.4/70.6
L116	6200006991	S.COI ELJRE 56NGFA	B	14.9/70.6

[LOGIC-1 UNIT]

REF NO.	PARTS NO.	DESCRIPTION	M.	H/V LOCATION
L117	6200006991	S.COI ELJRE 56NGFA	B	16.2/70.6
L119	6200006991	S.COI ELJRE 56NGFA	B	19.5/70.6
L120	6200006991	S.COI ELJRE 56NGFA	B	20.9/70.6
L121	6200006991	S.COI ELJRE 56NGFA	B	22.7/70.6
L150	6200002041	S.COI NLV25T-101J	T	99.7/17
L210	6200005741	S.COI ELJRE 47NGFA	T	70.6/67.4
L211	6200005741	S.COI ELJRE 47NGFA	B	47.7/53.7
L214	6200005741	S.COI ELJRE 47NGFA	B	49/56.4
L420	6200003590	S.COI EXCCL3225U1	B	30.9/74
L421	6200003590	S.COI EXCCL3225U1	B	38.8/73.9
L500	6190001561	S.COI CDRH5D18NP-101NC	T	104.3/74
L501	6190001561	S.COI CDRH5D18NP-101NC	T	104.3/66.8
L510	6200003590	S.COI EXCCL3225U1	B	108.8/70.7
L550	6200005521	S.COI NLV25T-470J	T	12.5/70.5
L551	6200005741	S.COI ELJRE 47NGFA	T	15.6/71.3
L552	6200006991	S.COI ELJRE 56NGFA	B	14.6/55.8
R1	7030003320	S.RES ERJ3GEYJ 101 V (100)	T	2.2/21.5
R2	7030003560	S.RES ERJ3GEYJ 103 V (10K)	T	2.9/23.5
R12	7030003640	S.RES ERJ3GEYJ 473 V (47K)	B	37.4/57.5
R13	7030003640	S.RES ERJ3GEYJ 473 V (47K)	T	37.1/61.8
R14	7030003640	S.RES ERJ3GEYJ 473 V (47K)	T	35.8/61.8
R15	7030003640	S.RES ERJ3GEYJ 473 V (47K)	T	34.5/61.8
R17	7030003640	S.RES ERJ3GEYJ 473 V (47K)	B	35.3/57.5
R18	7030003640	S.RES ERJ3GEYJ 473 V (47K)	T	35.5/40.5
R25	7030003450	S.RES ERJ3GEYJ 122 V (1.2K)	T	14.3/19.4
R26	7030003420	S.RES ERJ3GEYJ 681 V (680)	T	13.5/22.6
R27	7030003640	S.RES ERJ3GEYJ 473 V (47K)	T	15.3/35.5
R50	7030003640	S.RES ERJ3GEYJ 473 V (47K)	B	44.4/69.8
R51	7030003620	S.RES ERJ3GEYJ 333 V (33K)	T	47.2/65
R53	7030003640	S.RES ERJ3GEYJ 473 V (47K)	T	48.5/62.4
R54	7030003560	S.RES ERJ3GEYJ 103 V (10K)	T	15.5/44.4
R55	7030003640	S.RES ERJ3GEYJ 473 V (47K)	T	15.5/43
R57	7030003520	S.RES ERJ3GEYJ 472 V (4.7K)	B	3.7/43.9
R58	7030003680	S.RES ERJ3GEYJ 104 V (100K)	T	15.4/46.2
R59	7030003500	S.RES ERJ3GEYJ 332 V (3.3K)	B	2.4/43.9
R60	7030003570	S.RES ERJ3GEYJ 123 V (12K)	B	47.7/56.4
R61	7030003570	S.RES ERJ3GEYJ 123 V (12K)	B	45.8/56.4
R62	7030003620	S.RES ERJ3GEYJ 333 V (33K)	B	49.3/45.1
R63	7030003520	S.RES ERJ3GEYJ 472 V (4.7K)	B	53.9/44.5
R64	7030003320	S.RES ERJ3GEYJ 101 V (100)	B	61.5/39.7
R65	7030003320	S.RES ERJ3GEYJ 101 V (100)	B	62.8/39.7
R66	7030003320	S.RES ERJ3GEYJ 101 V (100)	T	72.5/35.1
R67	7030003320	S.RES ERJ3GEYJ 101 V (100)	T	72.5/37.7
R68	7030003600	S.RES ERJ3GEYJ 223 V (22K)	B	9.1/45.6
R69	7030003490	S.RES ERJ3GEYJ 272 V (2.7K)	T	8.2/46.7
R70	7030003620	S.RES ERJ3GEYJ 333 V (33K)	B	4.4/45.8
R71	7030003620	S.RES ERJ3GEYJ 333 V (33K)	B	4/50.5
R72	7030003620	S.RES ERJ3GEYJ 333 V (33K)	B	6.3/51.4
R73	7030003530	S.RES ERJ3GEYJ 562 V (5.6K)	B	7.1/49.6
R74	7030003640	S.RES ERJ3GEYJ 473 V (47K)	B	46.3/68.7
R75	7030003570	S.RES ERJ3GEYJ 123 V (12K)	B	48.1/69
R76	7030003510	S.RES ERJ3GEYJ 392 V (3.9K)	B	67.9/38.3
R78	7030003360	S.RES ERJ3GEYJ 221 V (220)	T	50.9/43.3
R79	7030003340	S.RES ERJ3GEYJ 151 V (150)	T	48.6/50.2
R100	7030003640	S.RES ERJ3GEYJ 473 V (47K)	T	76.5/26.2
R101	7030003560	S.RES ERJ3GEYJ 103 V (10K)	T	88/27.8
R102	7030003560	S.RES ERJ3GEYJ 103 V (10K)	T	88/26.5
R105	7030003380	S.RES ERJ3GEYJ 331 V (330)	T	95.8/55.9
R106	7030003800	S.RES ERJ3GEYJ 105 V (1M)	T	95.8/53.1
R107	7030003360	S.RES ERJ3GEYJ 221 V (220)	T	81.7/53.1
R108	7030003560	S.RES ERJ3GEYJ 103 V (10K)	T	87.5/50.6
R110	7030003370	S.RES ERJ3GEYJ 271 V (270)	B	52.3/8
R111	7030003410	S.RES ERJ3GEYJ 561 V (560)	B	90.3/44.5
R112	7030003410	S.RES ERJ3GEYJ 561 V (560)	B	89/44.5
R113	7030003370	S.RES ERJ3GEYJ 271 V (270)	B	42.1/5.9
R114	7030003420	S.RES ERJ3GEYJ 681 V (680)	B	39.5/5.9
R115	7030003640	S.RES ERJ3GEYJ 473 V (47K)	B	110.9/54.7
R116	7030003640	S.RES ERJ3GEYJ 473 V (47K)	B	106.3/57.8
R146	7030003640	S.RES ERJ3GEYJ 473 V (47K)	B	79.1/23.5
R148	7030003640	S.RES ERJ3GEYJ 473 V (47K)	B	105.5/9.9
R149	7030003320	S.RES ERJ3GEYJ 101 V (100)	T	88.4/14.2
R150	7030003640	S.RES ERJ3GEYJ 473 V (47K)	B	97.9/11
R151	7030003640	S.RES ERJ3GEYJ 473 V (47K)	B	97.9/9.7
R152	7030003640	S.RES ERJ3GEYJ 473 V (47K)	B	97.9/12.3
R153	7030003440	S.RES ERJ3GEYJ 102 V (1K)	B	97.9/14.9
R154	7030003640	S.RES ERJ3GEYJ 473 V (47K)	B	97.9/13.6
R155	7030003800	S.RES ERJ3GEYJ 105 V (1M)	T	92.4/15.3
R156	7030003640	S.RES ERJ3GEYJ 473 V (47K)	B	90.7/8.2
R157	7030003640	S.RES ERJ3GEYJ 473 V (47K)	B	95.3/8.8
R158	7030003750	S.RES ERJ3GEYJ 394 V (390K)	B	100.8/7.5
R159	7030009340	S.RES ERJ3GEYJ 275V (2.7M)	B	99.7/10.1
R199	7030003320	S.RES ERJ3GEYJ 101 V (100)	B	32.7/53.4
R200	7030003320	S.RES ERJ3GEYJ 101 V (100)	T	28.1/32
R201	7030003800	S.RES ERJ3GEYJ 105 V (1M)	T	22.4/32.8
R202	7030003520	S.RES ERJ3GEYJ 472 V (4.7K)	T	45.2/9.4
R203	7030003520	S.RES ERJ3GEYJ 472 V (4.7K)	T	31.6/5.8
R204	7030003640	S.RES ERJ3GEYJ 473 V (47K)	T	39/5.8
R205	7030003440	S.RES ERJ3GEYJ 102 V (1K)	B	24.3/23.2
R206	7030003440	S.RES ERJ3GEYJ 102 V (1K)	T	18.9/24.7
R207	7030003440	S.RES ERJ3GEYJ 102 V (1K)	T	18.9/26.1
R208	7030003320	S.RES ERJ3GEYJ 101 V (100)	B	34.8/34.8
R209	7030003800	S.RES ERJ3GEYJ 105 V (1M)	B	35.6/33
R210	7030003440	S.RES ERJ3GEYJ 102 V (1K)	T	41.5/33.3
R211	7030003400	S.RES ERJ3GEYJ 471 V (470)	B	37.8/52
R212	7030003360	S.RES ERJ3GEYJ 221 V (220)	T	15.5/28.1
R250	7030005661	S.RES ERA3YED 203V (20K)	T	52.9/5.8

M.=Mounted side (T: Mounted on the Top side, B: Mounted on the Bottom side)
S.=Surface mount

[LOGIC-1 UNIT]

REF NO.	PARTS NO.	DESCRIPTION	M.	H/V LOCATION
R251	7030005661	S.RES ERA3YED 203V (20K)	T	48.9/5.8
R252	7030005321	S.RES ERA3YED 103V (10K)	T	50.8/6.6
R253	7030005661	S.RES ERA3YED 203V (20K)	T	48.9/7.1
R254	7030005321	S.RES ERA3YED 103V (10K)	T	52.5/7.9
R255	7030005661	S.RES ERA3YED 203V (20K)	T	48.9/8.4
R256	7030005321	S.RES ERA3YED 103V (10K)	T	50.8/9.2
R257	7030005661	S.RES ERA3YED 203V (20K)	T	48.9/9.7
R258	7030005321	S.RES ERA3YED 103V (10K)	T	52.5/10.5
R259	7030005661	S.RES ERA3YED 203V (20K)	T	48.9/11
R260	7030005321	S.RES ERA3YED 103V (10K)	T	50.8/11.8
R261	7030005661	S.RES ERA3YED 203V (20K)	T	48.9/12.3
R262	7030005321	S.RES ERA3YED 103V (10K)	T	52.5/13.1
R263	7030005661	S.RES ERA3YED 203V (20K)	T	48.9/13.6
R264	7030005321	S.RES ERA3YED 103V (10K)	T	50.8/14.4
R265	7030005661	S.RES ERA3YED 203V (20K)	T	48.9/14.9
R266	7030005321	S.RES ERA3YED 103V (10K)	T	52.5/15.7
R267	7030005661	S.RES ERA3YED 203V (20K)	T	48.9/16.2
R268	7030005321	S.RES ERA3YED 103V (10K)	T	50.8/17
R269	7030005661	S.RES ERA3YED 203V (20K)	T	48.9/17.5
R270	7030005321	S.RES ERA3YED 103V (10K)	T	52.5/18.3
R271	7030005661	S.RES ERA3YED 203V (20K)	T	48.9/18.8
R272	7030005661	S.RES ERA3YED 203V (20K)	T	52.7/20.2
R273	7030005661	S.RES ERA3YED 203V (20K)	T	48.9/20.2
R274	7030005321	S.RES ERA3YED 103V (10K)	T	50.8/20.7
R275	7030005661	S.RES ERA3YED 203V (20K)	T	48.9/21.5
R276	7030005321	S.RES ERA3YED 103V (10K)	T	52.1/22.1
R277	7030005661	S.RES ERA3YED 203V (20K)	T	48.9/22.8
R278	7030005321	S.RES ERA3YED 103V (10K)	T	50.8/23.3
R279	7030005661	S.RES ERA3YED 203V (20K)	T	48.9/24.1
R280	7030005321	S.RES ERA3YED 103V (10K)	T	52.1/24.7
R281	7030005661	S.RES ERA3YED 203V (20K)	T	48.9/25.4
R282	7030005321	S.RES ERA3YED 103V (10K)	T	50.8/25.9
R283	7030005661	S.RES ERA3YED 203V (20K)	T	48.9/26.7
R284	7030005321	S.RES ERA3YED 103V (10K)	T	52.1/27.3
R285	7030005661	S.RES ERA3YED 203V (20K)	T	48.9/28
R286	7030005321	S.RES ERA3YED 103V (10K)	T	50.8/28.5
R287	7030005661	S.RES ERA3YED 203V (20K)	T	48.9/29.3
R288	7030005321	S.RES ERA3YED 103V (10K)	T	52.1/29.9
R289	7030005661	S.RES ERA3YED 203V (20K)	T	48.9/30.6
R290	7030005321	S.RES ERA3YED 103V (10K)	T	50.8/31.1
R291	7030005661	S.RES ERA3YED 203V (20K)	T	48.9/31.9
R292	7030005321	S.RES ERA3YED 103V (10K)	T	52.1/32.7
R293	7030005661	S.RES ERA3YED 203V (20K)	T	48.9/33.2
R300	7030003320	S.RES ERJ3GEYJ 101 V (100)	T	60.7/14.9
R301	7030003520	S.RES ERJ3GEYJ 472 V (4.7K)	T	56.4/22.1
R302	7030003530	S.RES ERJ3GEYJ 562 V (5.6K)	T	61.8/22.1
R303	7030003530	S.RES ERJ3GEYJ 562 V (5.6K)	T	63.7/19.4
R304	7030003480	S.RES ERJ3GEYJ 222 V (2.2K)	T	67.4/11.7
R305	7030003480	S.RES ERJ3GEYJ 222 V (2.2K)	T	67.4/13
R306	7030003480	S.RES ERJ3GEYJ 222 V (2.2K)	T	63.7/16.8
R307	7030003480	S.RES ERJ3GEYJ 222 V (2.2K)	T	63.7/14.2
R308	7030003600	S.RES ERJ3GEYJ 223 V (22K)	T	64.2/12.1
R310	7030003320	S.RES ERJ3GEYJ 101 V (100)	T	59.3/26
R311	7030003520	S.RES ERJ3GEYJ 472 V (4.7K)	T	55/33.2
R312	7030003530	S.RES ERJ3GEYJ 562 V (5.6K)	T	60.4/33.2
R313	7030003530	S.RES ERJ3GEYJ 562 V (5.6K)	T	62.3/30.5
R314	7030003480	S.RES ERJ3GEYJ 222 V (2.2K)	T	68.1/28.4
R315	7030003480	S.RES ERJ3GEYJ 222 V (2.2K)	T	68.1/27.1
R316	7030003480	S.RES ERJ3GEYJ 222 V (2.2K)	T	65.5/31
R317	7030003480	S.RES ERJ3GEYJ 222 V (2.2K)	T	68.1/31
R318	7030003600	S.RES ERJ3GEYJ 223 V (22K)	T	67.3/25.8
R320	7030003320	S.RES ERJ3GEYJ 101 V (100)	B	61.5/18.3
R348	7030003320	S.RES ERJ3GEYJ 101 V (100)	B	101.4/24
R349	7030003320	S.RES ERJ3GEYJ 101 V (100)	T	77.5/20.4
R350	7030003320	S.RES ERJ3GEYJ 101 V (100)	T	80.1/21.2
R351	7030003730	S.RES ERJ3GEYJ 274 V (270K)	T	96.5/25
R352	7030004710	S.RES ERJ3GEYJ 475 V (4.7M)	T	98.4/24.4
R353	7030003730	S.RES ERJ3GEYJ 274 V (270K)	T	96.5/21.1
R354	7030004710	S.RES ERJ3GEYJ 475 V (4.7M)	T	98.4/21.8
R355	7030003680	S.RES ERJ3GEYJ 104 V (100K)	T	103.2/21.8
R356	7030003680	S.RES ERJ3GEYJ 104 V (100K)	B	84.1/22.7
R357	7030003680	S.RES ERJ3GEYJ 104 V (100K)	B	84.9/20.8
R358	7030003320	S.RES ERJ3GEYJ 101 V (100)	T	99.7/18.9
R359	7030003560	S.RES ERJ3GEYJ 103 V (10K)	B	84/14.3
R360	7030003560	S.RES ERJ3GEYJ 103 V (10K)	B	86.6/15.2
R361	7030003600	S.RES ERJ3GEYJ 223 V (22K)	B	87.9/19.9
R362	7030003560	S.RES ERJ3GEYJ 103 V (10K)	B	90/19.1
R363	7030003800	S.RES ERJ3GEYJ 105 V (1M)	B	90.6/22.9
R364	7030003320	S.RES ERJ3GEYJ 101 V (100)	B	92.4/23.6
R365	7030003480	S.RES ERJ3GEYJ 222 V (2.2K)	T	90.7/19.7
R368	7030003520	S.RES ERJ3GEYJ 472 V (4.7K)	B	82.8/22.7
R400	7030003320	S.RES ERJ3GEYJ 101 V (100)	B	86.1/10.8
R402	7030003440	S.RES ERJ3GEYJ 102 V (1K)	B	12.2/15
R403	7030003320	S.RES ERJ3GEYJ 101 V (100)	T	15/5.9
R405	7030003440	S.RES ERJ3GEYJ 102 V (1K)	T	15/7.2
R406	7030003320	S.RES ERJ3GEYJ 101 V (100)	T	82/14.2
R407	7030003440	S.RES ERJ3GEYJ 102 V (1K)	T	83.3/14.2
R408	7030003320	S.RES ERJ3GEYJ 101 V (100)	T	84.6/14.2
R410	7030003440	S.RES ERJ3GEYJ 102 V (1K)	B	16.7/15
R411	7030003440	S.RES ERJ3GEYJ 102 V (1K)	B	18/15
R412	7030003440	S.RES ERJ3GEYJ 102 V (1K)	B	15.4/15
R413	7030003440	S.RES ERJ3GEYJ 102 V (1K)	B	14.1/15
R414	7030003440	S.RES ERJ3GEYJ 102 V (1K)	B	10.9/15
R415	7030003440	S.RES ERJ3GEYJ 102 V (1K)	T	40.7/68.9
R416	7030003440	S.RES ERJ3GEYJ 102 V (1K)	B	82.2/7.3
R417	7030003440	S.RES ERJ3GEYJ 102 V (1K)	B	83.5/7.3
R418	7030003440	S.RES ERJ3GEYJ 102 V (1K)	B	29.3/68.9
R419	7030003440	S.RES ERJ3GEYJ 102 V (1K)	T	28.5/68.9
R420	7030003440	S.RES ERJ3GEYJ 102 V (1K)	T	29.8/68.9
R421	7030003440	S.RES ERJ3GEYJ 102 V (1K)	T	31.1/68.9
R422	7030003320	S.RES ERJ3GEYJ 101 V (100)	T	75.5/14.2
R423	7030003440	S.RES ERJ3GEYJ 102 V (1K)	B	28/68.9
R424	7030003440	S.RES ERJ3GEYJ 102 V (1K)	T	42/68.9
R425	7030003320	S.RES ERJ3GEYJ 101 V (100)	T	74.2/14.2

[LOGIC-1 UNIT]

REF NO.	PARTS NO.	DESCRIPTION	M.	H/V LOCATION
R426	7030003560	S.RES ERJ3GEYJ 103 V (10K)	T	71.5/14.2
R427	7030003560	S.RES ERJ3GEYJ 103 V (10K)	B	80.9/10.8
R428	7030003320	S.RES ERJ3GEYJ 101 V (100)	T	72.9/14.2
R429	7030003320	S.RES ERJ3GEYJ 101 V (100)	T	78.1/14.2
R430	7030003320	S.RES ERJ3GEYJ 101 V (100)	T	80.7/14.2
R431	7030003320	S.RES ERJ3GEYJ 101 V (100)	T	76.8/14.2
R432	7030003320	S.RES ERJ3GEYJ 101 V (100)	B	75.3/13.4
R433	7030003440	S.RES ERJ3GEYJ 102 V (1K)	T	27.2/68.9
R434	7030003320	S.RES ERJ3GEYJ 101 V (100)	B	85.4/8
R435	7030003320	S.RES ERJ3GEYJ 101 V (100)	T	79.4/14.2
R436	7030003320	S.RES ERJ3GEYJ 101 V (100)	B	22/15
R437	7030003320	S.RES ERJ3GEYJ 101 V (100)	B	73.4/12.5
R438	7030003480	S.RES ERJ3GEYJ 222 V (2.2K)	B	87.4/10.8
R439	7030003680	S.RES ERJ3GEYJ 104 V (100K)	T	86.5/13.4
R440	7030003640	S.RES ERJ3GEYJ 473 V (47K)	T	71.5/17.4
R500	7030003560	S.RES ERJ3GEYJ 103 V (10K)	T	80.4/66.8
R501	7030000420	S.RES MCR10EZHJ 2.2K (222)	T	78.1/70.1
R502	7030003470	S.RES ERJ3GEYJ 182 V (1.8K)	B	72/73.7
R503	7030003530	S.RES ERJ3GEYJ 562 V (5.6K)	T	108.4/65.2
R504	7030003500	S.RES ERJ3GEYJ 332 V (3.3K)	T	111/65.2
R505	7030000020	S.RES MCR10EZHJ 1 (010)	B	112.2/71.7
R506	7030003640	S.RES ERJ3GEYJ 473 V (47K)	B	66.7/71.9
R507	7030003570	S.RES ERJ3GEYJ 123 V (12K)	B	68/71.9
R508	7030003640	S.RES ERJ3GEYJ 473 V (47K)	B	68/74.5
R509	7030003600	S.RES ERJ3GEYJ 223 V (22K)	T	109.7/65.2
R510	7030003520	S.RES ERJ3GEYJ 472 V (4.7K)	T	69.8/70.1
R511	7030000180	S.RES MCR10EZHJ 22 (220)	T	81.4/68.4
R512	7030000180	S.RES MCR10EZHJ 22 (220)	T	81.4/70.1
R513	7030000420	S.RES MCR10EZHJ 2.2K (222)	T	78.1/68.4
R550	7030003550	S.RES ERJ3GEYJ 822 V (8.2K)	B	3.9/59.5
R551	7030003580	S.RES ERJ3GEYJ 153 V (15K)	B	3.9/57.8
R552	7030003550	S.RES ERJ3GEYJ 822 V (8.2K)	B	9.9/56.8
R553	7030003580	S.RES ERJ3GEYJ 153 V (15K)	B	9.9/55.5
R556	7030003680	S.RES ERJ3GEYJ 104 V (100K)	B	10.5/63.4
R558	7030003400	S.RES ERJ3GEYJ 471 V (470)	B	17.2/55.8
R560	7030003680	S.RES ERJ3GEYJ 104 V (100K)	T	17.8/52.2
R561	7030003560	S.RES ERJ3GEYJ 103 V (10K)	B	12.9/52.4
R562	7030003460	S.RES ERJ3GEYJ 152 V (1.5K)	B	15.8/62.2
R563	7030003250	S.RES ERJ3GEYJ 270 V (27)	T	18.8/68.8
R564	7030003250	S.RES ERJ3GEYJ 270 V (27)	T	19.2/63.6
R566	7030003480	S.RES ERJ3GEYJ 222 V (2.2K)	B	12.1/54.3
R567	7030003640	S.RES ERJ3GEYJ 473 V (47K)	B	13.6/49
R568	7030003340	S.RES ERJ3GEYJ 151 V (150)	B	11.9/51
W1	7030003860	S.RES ERJ3GE JPW V	T	10.8/20.1
W50	7030003860	S.RES ERJ3GE JPW V	T	51.8/67
W51	7030003860	S.RES ERJ3GE JPW V	B	47/59.2
W52	7030003860	S.RES ERJ3GE JPW V	B	59.2/64.3
W125	7030003860	S.RES ERJ3GE JPW V	T	17.7/73.8
W126	7030003860	S.RES ERJ3GE JPW V	T	10.4/76.8
W129	7030003860	S.RES ERJ3GE JPW V	T	23.3/73.8
W200	7030003860	S.RES ERJ3GE JPW V	B	58.3/16
W213	7030003860	S.RES ERJ3GE JPW V	B	43.7/29.1
W300	7030003860	S.RES ERJ3GE JPW V	T	55.5/5.8
W310	7030003860	S.RES ERJ3GE JPW V	T	71.6/21.4
W400	7030003860	S.RES ERJ3GE JPW V	B	77.3/12.3
W401	7030003860	S.RES ERJ3GE JPW V	B	77.7/7.3
W402	7030003860	S.RES ERJ3GE JPW V	B	7.7/35.7
W403	7030003860	S.RES ERJ3GE JPW V	B	36/71.1
C1	4030011600	S.CER C1608 JB 1E 104K-T	T	2.9/19.5
C2	4030010770	S.CER C1608 JB 1H 392K-T	T	3.6/21.5
C3	4030011600	S.CER C1608 JB 1E 104K-T	T	7.6/25.3
C4	4550006250	S.TAN TEESVA 1A 106M8R	T	8.9/23.6
C5	4030011600	S.CER C1608 JB 1E 104K-T	T	7.6/26.6
C7	4030008880	S.CER C1608 JB 1H 223K-T	T	12.7/20.8
C9	4030017490	S.CER C1608 JB 1A 105K-T	T	14.8/22.2
C11	4030011600	S.CER C1608 JB 1E 104K-T	B	7.7/34.4
C12	4550006250	S.TAN TEESVA 1A 106M8R	T	3.7/36.1
C13	4030011600	S.CER C1608 JB 1E 104K-T	T	11.5/36.4
C14	4550006250	S.TAN TEESVA 1A 106M8R	T	11.1/38.3
C15	4030007090	S.CER C1608 CH 1H 470J-T	T	38.9/61.8
C16	4030011600	S.CER C1608 JB 1E 104K-T	T	30.8/61.8
C17	4030011600	S.CER C1608 JB 1E 104K-T	B	36.6/50.3
C18	4030011600	S.CER C1608 JB 1E 104K-T	T	41/49
C19	4030011600	S.CER C1608 JB 1E 104K-T	T	32.6/41
C20	4030011600	S.CER C1608 JB 1E 104K-T	B	41.7/47.2
C21	4030011600	S.CER C1608 JB 1E 104K-T	B	27.9/46.8
C22	4030011600	S.CER C1608 JB 1E 104K-T	T	21.6/54.7
C23	4030011600	S.CER C1608 JB 1E 104K-T	T	21.6/50.5
C24	4550006250	S.TAN TEESVA 1A 106M8R	T	29.9/38.6
C25	4550006250	S.TAN TEESVA 1A 106M8R	B	48.9/40.9
C26	4030011600	S.CER C1608 JB 1E 104K-T	T	37.4/39.9
C51	4030006860	S.CER C1608 JB 1H 102K-T	B	44.4/68
C52	4030011600	S.CER C1608 JB 1E 104K-T	T	43.4/65
C53	4030011600	S.CER C1608 JB 1E 104K-T	B	43.9/57.2
C54	4030011600	S.CER C1608 JB 1E 104K-T	B	36.7/38.6
C55	4030011600	S.CER C1608 JB 1E 104K-T	T	54.4/67
C56	4030008560	S.CER C1608 CH 1H 300J-T	T	49/48.4
C57	4030008560	S.CER C1608 CH 1H 300J-T	T	47.7/48.1
C58	4030006900	S.CER C1608 JB 1H 103K-T	B	54.1/39.9
C59	4030011600	S.CER C1608 JB 1E 104K-T	T	61.9/40.6
C60	4030011600	S.CER C1608 JB 1E 104K-T	T	70.4/40.5
C61	4030007090	S.CER C1608 CH 1H 470J-T	B	46.4/51.3
C62	4030007090	S.CER C1608 CH 1H 470J-T	B	61.4/45.7
C63	4030007090	S.CER C1608 CH 1H 470J-T	B	63.3/46.5
C64	4030007090	S.CER C1608 CH 1H 470J-T	B	64.6/41.1
C65	4030007090	S.CER C1608 CH 1H 470J-T	B	57.3/38
C66	4030007090	S.CER C1608 CH 1H 470J-T	B	57.2/36.7
C67	4030007090	S.CER C1608 CH 1H 470J-T	B	71.5/61.3
C68	4030007090	S.CER C1608 CH 1H 470J-T	B	70.3/54.4
C69	4030007090	S.CER C1608 CH 1H 470J-T	B	66/46.2

M.=Mounted side (T: Mounted on the Top side, B: Mounted on the Bottom side)
S.=Surface mount

[LOGIC-1 UNIT]

REF NO.	PARTS NO.	DESCRIPTION	M.	H/V LOCATION
C71	4030007090	S.CER C1608 CH 1H 470J-T	T	21.6/46
C86	4030006900	S.CER C1608 JB 1H 103K-T	B	47.1/49.5
C88	4030006850	S.CER C1608 JB 1H 471K-T	B	46.3/71.3
C100	4030006850	S.CER C1608 JB 1H 471K-T	B	79.5/40
C101	4030006900	S.CER C1608 JB 1H 103K-T	T	106.1/58.6
C102	4030006900	S.CER C1608 JB 1H 103K-T	T	110.9/57.2
C103	4030006900	S.CER C1608 JB 1H 103K-T	B	113.2/56.4
C104	4030006900	S.CER C1608 JB 1H 103K-T	T	113.1/47.2
C105	4030011600	S.CER C1608 JB 1E 104K-T	T	84.4/51.4
C106	4030007060	S.CER C1608 CH 1H 270J-T	T	94.5/55.9
C107	4030007060	S.CER C1608 CH 1H 270J-T	T	94.5/53.1
C108	4030011600	S.CER C1608 JB 1E 104K-T	T	103/43.3
C109	4030006900	S.CER C1608 JB 1H 103K-T	T	79.8/53.1
C110	4030006900	S.CER C1608 JB 1H 103K-T	T	92.5/53.1
C111	4030006900	S.CER C1608 JB 1H 103K-T	T	92.5/55.9
C112	4030006900	S.CER C1608 JB 1H 103K-T	T	79.8/55.9
C113	4030011600	S.CER C1608 JB 1E 104K-T	T	108.5/27.6
C121	4030007050	S.CER C1608 CH 1H 220J-T	T	11.9/73.8
C122	4030007050	S.CER C1608 CH 1H 220J-T	T	13.5/73.8
C123	4030007050	S.CER C1608 CH 1H 220J-T	T	14.9/73.8
C124	4030007050	S.CER C1608 CH 1H 220J-T	T	16.3/73.8
C126	4030007050	S.CER C1608 CH 1H 220J-T	T	19.1/73.8
C127	4030007050	S.CER C1608 CH 1H 220J-T	T	20.5/73.8
C128	4030007050	S.CER C1608 CH 1H 220J-T	T	21.9/73.8
C150	4030006900	S.CER C1608 JB 1H 103K-T	T	86.5/15.2
C151	4030011600	S.CER C1608 JB 1E 104K-T	T	104/10.1
C152	4550007520	S.TAN F931A106MAABMA	T	105.7/10.9
C153	4030012600	S.CER C2012 JB 1A 105M-T	T	91.3/9.3
C154	4030011600	S.CER C1608 JB 1E 104K-T	T	91.5/7.7
C155	4030006860	S.CER C1608 JB 1H 102K-T	T	100.9/6.4
C156	4030006860	S.CER C1608 JB 1H 102K-T	T	104/7.5
C157	4030011600	S.CER C1608 JB 1E 104K-T	B	102.9/9.9
C158	4030011600	S.CER C1608 JB 1E 104K-T	T	91.1/15.3
C159	4030007130	S.CER C1608 CH 1H 101J-T	T	91.4/10.9
C160	4030008890	S.CER C1608 JB 1H 273K-T	B	100/6.2
C161	4030008890	S.CER C1608 JB 1H 273K-T	B	98.2/8.3
C162	4030007000	S.CER C1608 CH 1H 090D-T	B	93.3/8.5
C200	4030011600	S.CER C1608 JB 1E 104K-T	B	34.6/54.2
C202	4610001590	S.TRI TZC3R100A110R00 (TZC03R100A110)	T	24.6/36.1
C203	4030011600	S.CER C1608 JB 1E 104K-T	T	28.1/33.3
C204	4030006980	S.CER C1608 CH 1H 070D-T	T	23.7/32.8
C206	4030006900	S.CER C1608 JB 1H 103K-T	T	17.3/18.8
C207	4030011600	S.CER C1608 JB 1E 104K-T	T	24.2/5.8
C208	4030006900	S.CER C1608 JB 1H 103K-T	T	34.2/5.8
C209	4030011600	S.CER C1608 JB 1E 104K-T	T	43.5/7.8
C210	4030011600	S.CER C1608 JB 1E 104K-T	B	32.1/29.7
C211	4030011600	S.CER C1608 JB 1E 104K-T	B	23.4/26.6
C212	4030009650	S.CER C1608 CH 1H 240J-T	T	39.3/37
C213	4030006980	S.CER C1608 CH 1H 070D-T	B	32.3/33
C214	4030006900	S.CER C1608 JB 1H 103K-T	B	38.1/30.3
C215	4610001590	S.TRI TZC3R100A110R00 (TZC03R100A110)	T	32/33.8
C216	4550006780	S.TAN TEESVB2 0J 476M8R	B	48.8/25.6
C300	4550006250	S.TAN TEESVA 1A 106M8R	T	56.5/15.4
C301	4030010040	S.CER C1608 JB 1H 561K-T	T	59/22.1
C302	4030009490	S.CER C1608 JB 1H 821K-T	T	65/19.4
C303	4340000270	S.MYL ECHU 1H 121GB5	T	60.7/16.5
C304	4030007170	S.CER C1608 CH 1H 221J-T	T	67.4/14.3
C305	4030007170	S.CER C1608 CH 1H 221J-T	T	67.7/15.6
C306	4030007170	S.CER C1608 CH 1H 221J-T	T	65/16.8
C307	4030007170	S.CER C1608 CH 1H 221J-T	T	65/14.2
C308	4550005980	S.TAN TEESVA 1A 475M8R	T	60.3/11.7
C309	4030010760	S.CER C1608 CH 1H 331J-T	T	61.8/13.4
C310	4550006250	S.TAN TEESVA 1A 106M8R	T	55.2/26.5
C311	4030010040	S.CER C1608 JB 1H 561K-T	T	57.6/33.2
C312	4030009490	S.CER C1608 JB 1H 821K-T	T	63.6/30.5
C313	4340000270	S.MYL ECHU 1H 121GB5	T	59.4/27.6
C314	4030007170	S.CER C1608 CH 1H 221J-T	T	68.1/32.3
C315	4030007170	S.CER C1608 CH 1H 221J-T	T	68.1/33.6
C316	4030007170	S.CER C1608 CH 1H 221J-T	T	65.5/29.7
C317	4030007170	S.CER C1608 CH 1H 221J-T	T	68.1/29.7
C318	4550005980	S.TAN TEESVA 1A 475M8R	T	63.4/25.8
C319	4030010760	S.CER C1608 CH 1H 331J-T	T	65.1/22.4
C320	4510008490	S.ELE EEE1CS100SR	B	59.6/21.7
C349	4550006250	S.TAN TEESVA 1A 106M8R	B	87.7/24.7
C350	4030011600	S.CER C1608 JB 1E 104K-T	T	82/20.4
C351	4030011600	S.CER C1608 JB 1E 104K-T	T	90.6/26.5
C352	4030011600	S.CER C1608 JB 1E 104K-T	T	76.5/22.3
C353	4030011810	S.CER C1608 JB 1A 224K-T	T	92.4/27.1
C354	4030011600	S.CER C1608 JB 1E 104K-T	T	93.7/27.1
C355	4030006860	S.CER C1608 JB 1H 102K-T	T	96.5/23.7
C356	4030006860	S.CER C1608 JB 1H 102K-T	T	96.5/22.4
C357	4030011600	S.CER C1608 JB 1E 104K-T	T	100.6/26.3
C358	4030006860	S.CER C1608 JB 1H 102K-T	T	101.3/21
C359	4030008920	S.CER C1608 JB 1H 473K-T	B	85.7/22.7
C360	4030011600	S.CER C1608 JB 1E 104K-T	T	104.8/16.4
C361	4030011810	S.CER C1608 JB 1A 224K-T	T	93.3/19.7
C362	4030011600	S.CER C1608 JB 1E 104K-T	B	85.2/17.8
C363	4030008920	S.CER C1608 JB 1H 473K-T	T	82/17.8
C364	4030011600	S.CER C1608 JB 1E 104K-T	T	93.3/18.4
C400	4030006850	S.CER C1608 JB 1H 471K-T	T	17.6/5.9
C401	4030007090	S.CER C1608 CH 1H 470J-T	T	17.6/7.2
C402	4030006900	S.CER C1608 JB 1H 103K-T	B	82/17.6
C403	4030007090	S.CER C1608 CH 1H 470J-T	B	16.8/19.1
C404	4030007090	S.CER C1608 CH 1H 470J-T	B	18.1/18.7
C405	4030007090	S.CER C1608 CH 1H 470J-T	B	15.5/19.1
C406	4030007090	S.CER C1608 CH 1H 470J-T	B	14.2/19.1
C407	4030007090	S.CER C1608 CH 1H 470J-T	T	38.8/68.1
C408	4030007090	S.CER C1608 CH 1H 470J-T	B	83.4/10.8
C409	4030007130	S.CER C1608 CH 1H 101J-T	B	77.1/14.2
C410	4030007130	S.CER C1608 CH 1H 101J-T	T	76.8/17.6
C411	4030007130	S.CER C1608 CH 1H 101J-T	B	83.9/17.8
C412	4030007130	S.CER C1608 CH 1H 101J-T	B	86.6/13.4

[LOGIC-1 UNIT]

REF NO.	PARTS NO.	DESCRIPTION	M.	H/V LOCATION
C413	4030007090	S.CER C1608 CH 1H 470J-T	T	43.3/68.9
C414	4030007090	S.CER C1608 CH 1H 470J-T	B	31.7/65.5
C415	4030007090	S.CER C1608 CH 1H 470J-T	B	30.4/65.5
C416	4030007090	S.CER C1608 CH 1H 470J-T	B	31.2/68.2
C417	4030007090	S.CER C1608 CH 1H 470J-T	B	29.1/65.5
C418	4030007090	S.CER C1608 CH 1H 470J-T	B	27.8/65.5
C419	4030007090	S.CER C1608 CH 1H 470J-T	B	26.5/65.5
C420	4030007090	S.CER C1608 CH 1H 470J-T	B	41.6/74.7
C421	4030007090	S.CER C1608 CH 1H 470J-T	B	29.7/71.8
C422	4030007090	S.CER C1608 CH 1H 470J-T	B	8.2/15.4
C423	4030007090	S.CER C1608 CH 1H 470J-T	B	9.5/15.4
C424	4030007090	S.CER C1608 CH 1H 470J-T	B	72/16.8
C425	4030007090	S.CER C1608 CH 1H 470J-T	B	71.3/14.2
C426	4030007090	S.CER C1608 CH 1H 470J-T	B	73.4/10.7
C427	4030007090	S.CER C1608 CH 1H 470J-T	T	74.9/18.1
C428	4030007090	S.CER C1608 CH 1H 470J-T	B	76.9/16.9
C429	4030007090	S.CER C1608 CH 1H 470J-T	T	78.1/16.8
C430	4030007090	S.CER C1608 CH 1H 470J-T	T	79.4/16.8
C431	4030007090	S.CER C1608 CH 1H 470J-T	B	87.3/7.2
C432	4030007090	S.CER C1608 CH 1H 470J-T	B	80.6/17.6
C433	4030007090	S.CER C1608 CH 1H 470J-T	B	80.9/14.2
C434	4030007090	S.CER C1608 CH 1H 470J-T	B	80.3/6.5
C435	4030007090	S.CER C1608 CH 1H 470J-T	B	82.2/14.2
C437	4030007090	S.CER C1608 CH 1H 470J-T	B	84.7/12.4
C438	4030007090	S.CER C1608 CH 1H 470J-T	B	22/17.6
C442	4030011600	S.CER C1608 JB 1E 104K-T	T	80.7/17.6
C443	4030011810	S.CER C1608 JB 1A 224K-T	B	71.3/18.6
C500	4510008520	S.ELE EEE1CA470SP	B	84.4/63.5
C501	4030011600	S.CER C1608 JB 1E 104K-T	T	84.1/66.4
C502	4030011600	S.CER C1608 JB 1E 104K-T	T	86.5/67
C503	4510008520	S.ELE EEE1CA470SP	B	96.2/63.9
C504	4030006850	S.CER C1608 JB 1H 471K-T	T	86.5/65.7
C506	4030011600	S.CER C1608 JB 1E 104K-T	T	58.6/7.5
C509	4550006250	S.TAN TEESVA 1A 106M8R	T	85.3/64
C510	4030011600	S.CER C1608 JB 1E 104K-T	T	97.4/17.8
C511	4030011600	S.CER C1608 JB 1E 104K-T	T	90.5/64.2
C512	4550006250	S.TAN TEESVA 1A 106M8R	T	88.8/64.4
C513	4510007130	S.ELE EEFCD 0J 470R	T	98.6/73.1
C514	4030006850	S.CER C1608 JB 1H 471K-T	T	109.3/75.9
C515	4510008850	S.ELE EEE1CA101P	B	109.5/63.3
C516	4510008490	S.ELE EEE1CS100SR	B	64.2/76
C517	4030011600	S.CER C1608 JB 1E 104K-T	T	66.9/75.3
C518	4030011600	S.CER C1608 JB 1E 104K-T	T	64.5/72.5
C519	4550006250	S.TAN TEESVA 1A 106M8R	T	65.2/69.9
C520	4550007480	S.TAN F930J106MAABMA	T	71.7/75.7
C521	4550007480	S.TAN F930J106MAABMA	B	69.4/64.9
C522	4550007320	S.TAN F930J226MAABMA	T	96.6/65.7
C550	4030008560	S.CER C1608 CH 1H 300J-T	T	4.2/63
C551	4030008560	S.CER C1608 CH 1H 300J-T	T	4.2/48
C553	4030011600	S.CER C1608 JB 1E 104K-T	B	15.4/53.9
C554	4030011600	S.CER C1608 JB 1E 104K-T	T	18.1/56.2
C556	4030008900	S.CER C1608 JB 1H 333K-T	B	18.7/64.1
C557	4550007480	S.TAN F930J106MAABMA	T	13/68.2
C558	4030006900	S.CER C1608 JB 1H 103K-T	T	10.1/70.3
C559	4030007090	S.CER C1608 CH 1H 470J-T	T	84/55.1
C560	4030007090	S.CER C1608 CH 1H 470J-T	B	79.5/41.3
C561	4030007090	S.CER C1608 CH 1H 470J-T	T	85.7/51.4
C562	4030007090	S.CER C1608 CH 1H 470J-T	T	88.3/52.4
C563	4030007090	S.CER C1608 CH 1H 470J-T	T	103/42
C564	4030007090	S.CER C1608 CH 1H 470J-T	T	99.3/30
C565	4030007090	S.CER C1608 CH 1H 470J-T	B	96.2/34.6
C566	4030007090	S.CER C1608 CH 1H 470J-T	T	90.6/27.8
C567	4030007090	S.CER C1608 CH 1H 470J-T	T	85.4/27.8
C568	4030007090	S.CER C1608 CH 1H 470J-T	T	85.4/26.5
C569	4030007090	S.CER C1608 CH 1H 470J-T	T	78.8/28.4
C570	4030007090	S.CER C1608 CH 1H 470J-T	T	81.7/27.8
C571	4030007090	S.CER C1608 CH 1H 470J-T	B	93.2/44.5
C572	4030007090	S.CER C1608 CH 1H 470J-T	B	90.3/47.7
C573	4030007090	S.CER C1608 CH 1H 470J-T	B	89/47.7
C574	4030007090	S.CER C1608 CH 1H 470J-T	T	78.5/55.9
C575	4030007090	S.CER C1608 CH 1H 470J-T	T	78.5/53.1
C576	4030007090	S.CER C1608 CH 1H 470J-T	T	91.2/53.1
C577	4030007090	S.CER C1608 CH 1H 470J-T	T	91.2/55.9
C578	4030007090	S.CER C1608 CH 1H 470J-T	B	12.3/49
C579	4030007090	S.CER C1608 CH 1H 470J-T	B	10.7/47
J50	6510019271	S.CON 52365-0671	T	5.1/43.9
J100	6510021291	S.CON S10B-ZR-SM4A-TF(LF)(SN)	B	18.7/77.2
J101	6510022820	S.CON AXN430C530P	B	17.2/8.8
J300	6510018351	S.CON S3B-ZR-SM4A-TF(LF)(SN)	T	13.9/12.4
J400	6510022711	S.CON 30FLZ-SM2-TB(LF)(SN)	T	78/7.7
J401	6510022711	S.CON 30FLZ-SM2-TB(LF)(SN)	T	35/74.4
DS100	5040002050	LED SPR-39MVWF		
DS101	5040002050	LED SPR-39MVWF		
DS102	5040002050	LED SPR-39MVWF		
T100	5920000801	TRA 20F001NG <YCL>		
EP2	6910012350	S.BEA MMZ1608Y 102BT	B	13.6/32.8
EP3	6910012350	S.BEA MMZ1608Y 102BT	T	7.2/38.3

M.=Mounted side (T: Mounted on the Top side, B: Mounted on the Bottom side)

S.=Surface mount

[MAIN-1 UNIT]

REF NO.	PARTS NO.	DESCRIPTION		M.	H/V LOCATION
IC71	1110004470	S.IC	UPC2721GV-E1	T	45.5/76.4
IC191	1110003491	S.IC	TA31136FNG(D,EL)	T	46.5/29.9
IC271	1110006750	S.IC	TK14570LTL-G	T	81.7/33.3
IC341	1130008090	S.IC	BU4066BCFV-E1	T	92.5/35.1
IC342	1130006221	S.IC	TC4W53FU(TE12L,F)	T	106.9/33.8
IC343	1110005290	S.IC	NJM2115V-TE1-#ZZZB	T	98.2/28.2
IC345	1130004201	S.IC	TC4S66F(TE85R,F)	T	66.3/33.4
IC400	1130010100	S.IC	LMX2352TMX/NOPB	B	25.6/64.8
IC550	1130007611	S.IC	UPD3140GS-E1-A	B	12.7/35
IC551	1130006221	S.IC	TC4W53FU(TE12L,F)	B	21/43.6
IC830	1180003470	S.REG	NJM2835DL1-05-TE1-#ZZZB	B	31.5/4.6
IC832	1110007510	S.IC	NJM2717RB1-TE1-#ZZZB	B	57.7/33.3
IC890	1110007490	S.IC	TRF3701IRHC	B	50.6/40.3
IC960	1110005150	S.IC	UPC8163TB-E3	B	53.3/61.8
IC1021	1110006430	S.IC	UPC1678GV-E1-A	T	68.2/53.8
IC1250	1110002751	S.IC	TA75S01F(TE85R,F)	B	78.9/124.3
IC1251	1110002751	S.IC	TA75S01F(TE85R,F)	B	80.1/116
IC1330	1180002080	S.REG	BA09FP-E2	B	75.3/89
IC1331	1180001071	S.IC	TA7805F(TE16L,Q)	B	77/100.9
IC1332	1180002020	S.REG	BA033FP-E2	B	36.4/96.1
IC1411	1130006221	S.IC	TC4W53FU(TE12L,F)	T	41.4/20.4
IC1460	1110003780	S.IC	NJM2902V-TE1-#ZZZB	T	41.4/14.6
IC1461	1110003780	S.IC	NJM2902V-TE1-#ZZZB	B	49.3/8.4
IC1462	1130006221	S.IC	TC4W53FU(TE12L,F)	B	42.1/14.6
IC1463	1130006221	S.IC	TC4W53FU(TE12L,F)	B	59.2/6.2
IC1550	1110003300	S.IC	M5282FP 70CD	B	12.2/56
IC1551	1110003091	IC	LA4425A-E		
IC1670	1130006221	S.IC	TC4W53FU(TE12L,F)	T	84.6/14.1
IC1671	1110004050	S.IC	NJM3404AV-TE1-#FMZB	B	80.2/20.3
IC1672	1110005310	S.IC	AN6123MS	T	74.7/12.9
IC1673	1130006221	S.IC	TC4W53FU(TE12L,F)	B	75.7/14.6
Q1	1590002970	S.FET	NE34018-T1 64	T	57.3/105.2
Q2	1530003660	S.TRA	2SC5454-T1 R54	T	52.2/90.4
Q131	1580000680	S.FET	3SK241-R(TX)	T	41.9/58.9
Q191	1530002601	S.TRA	2SC4215-O(TE85R,F)	T	44.9/35.3
Q192	1530002280	S.TRA	2SC4081 T106 S	T	56.7/32.9
Q193	1530002280	S.TRA	2SC4081 T106 S	T	59.9/35.7
Q270	1530002601	S.TRA	2SC4215-O(TE85R,F)	T	66.1/41.6
Q271	1530002601	S.TRA	2SC4215-O(TE85R,F)	B	79/42.6
Q272	1590000720	S.TRA	DTA144EUA T106	T	60.4/41.9
Q341	1590000720	S.TRA	DTA144EUA T106	T	54.1/11.1
Q342	1590000430	S.TRA	DTC144EUA T106	T	69.4/32.9
Q400	1530002920	S.TRA	2SC4226-T1 R25	T	23.2/52.5
Q470	1540000660	S.TRA	2SD2216J-S	T	14.6/74.6
Q471	1530003560	S.TRA	2SC5195-T1	T	25.6/73.1
Q472	1530003560	S.TRA	2SC5195-T1	T	23.5/73.3
Q473	1530002920	S.TRA	2SC4226-T1 R25	T	29.9/67.7
Q474	1530003311	S.TRA	2SC5107-O(TE85R,F)	B	29.1/72.8
Q550	1530002280	S.TRA	2SC4081 T106 S	T	25.3/48.5
Q630	1590000430	S.TRA	DTC144EUA T106	T	8/27.7
Q631	1530002920	S.TRA	2SC4226-T1 R25	T	23.7/32.8
Q632	1530002920	S.TRA	2SC4226-T1 R25	T	29/30.2
Q633	1530002920	S.TRA	2SC4226-T1 R25	B	26.3/29.8
Q634	1540000660	S.TRA	2SD2216J-S	T	30.3/35
Q710	1530003311	S.TRA	2SC5107-O(TE85R,F)	B	38.6/73.3
Q770	1590001330	S.TRA	DTA114EUA T106	B	34.1/58.9
Q771	1530002920	S.TRA	2SC4226-T1 R25	T	26.6/39.9
Q890	1530003311	S.TRA	2SC5107-O(TE85R,F)	B	35.3/39.4
Q1080	1560001091	S.FET	2SK2854(T2LICOM,F)	B	98.4/39.4
Q1081	1560001141	S.FET	2SK2855(TE12L,F)	B	108.6/38.2
Q1082	1540000471	S.TRA	2SD1801S-TL-E	B	76.3/65.4
Q1250	1590000430	S.TRA	DTC144EUA T106	B	64.7/127.1
Q1330	1590001320	S.TRA	DTC143ZUA T106	B	63.8/108.7
Q1331	1510000890	S.TRA	DTA143TU T106	B	63.8/105.3
Q1332	1530003910	S.TRA	2SC4684 (TE16L1 NQ)	B	63.4/98.6
Q1333	1520000730	S.TRA	2SB934P(DS)-(TX)	B	76.3/75.5
Q1334	1530002280	S.TRA	2SC4081 T106 S	B	63.1/74.7
Q1335	1590000430	S.TRA	DTC144EUA T106	B	62.8/71.6
Q1336	1540000441	S.TRA	2SD1619T-TD-E	B	26.6/95.1
Q1337	1510000581	S.TRA	2SA1362-GR(TE85R,F)	B	37/89.7
Q1338	1590000430	S.TRA	DTC144EUA T106	T	27.5/95.2
Q1340	1590000430	S.TRA	DTC144EUA T106	T	25/95.2
Q1341	1590000430	S.TRA	DTC144EUA T106	T	35.4/96.8
Q1342	1510000581	S.TRA	2SA1362-GR(TE85R,F)	B	40.2/87.8
Q1343	1510000581	S.TRA	2SA1362-GR(TE85R,F)	B	42.9/93.8
Q1344	1590000430	S.TRA	DTC144EUA T106	T	44.6/89.2
Q1345	1590000430	S.TRA	DTC144EUA T106	B	63.4/57.8
Q1346	1590000430	S.TRA	DTC144EUA T106	B	63.5/51.9
Q1347	1590000430	S.TRA	DTC144EUA T106	B	66.6/52.7
Q1348	1510000581	S.TRA	2SA1362-GR(TE85R,F)	B	55.2/55.7
Q1349	1510000581	S.TRA	2SA1362-GR(TE85R,F)	B	60.9/55.4
Q1350	1510000581	S.TRA	2SA1362-GR(TE85R,F)	B	39.9/34.1
Q1351	1590000430	S.TRA	DTC144EUA T106	B	35.6/32.9
Q1352	1590000430	S.TRA	DTC144EUA T106	B	48.2/89.4
Q1460	1530002280	S.TRA	2SC4081 T106 S	T	5.9/75.3
Q1550	1560000831	S.FET	2SK2036 (TE85L,F)	B	10.3/70
Q1600	1540000251	S.TRA	2SD999-T2-AZ CK	B	110.1/19.2
Q1603	1530002280	S.TRA	2SC4081 T106 S	T	108.6/20.1
Q1670	1590001451	S.FET	2SJ144-GR (TE85R,F)	T	98.1/16.1
Q1671	1590000430	S.TRA	DTC144EUA T106	T	96/12.9
Q1673	1530002280	S.TRA	2SC4081 T106 S	T	92.8/16.4
Q1750	1520000201	S.TRA	2SB798-T2-AZ DK	B	23.2/114.9
Q1751	1530002280	S.TRA	2SC4081 T106 S	T	26.5/119.1
Q1800	1590000430	S.TRA	DTC144EUA T106	T	11/24.8
D131	1790001621	S.DIO	1SV308(TPL3,F)	T	39.3/52.9
D192	1750000361	S.DIO	1SS364(TE85L,F)	B	49.5/25.5
D193	1750000361	S.DIO	1SS364(TE85L,F)	B	56.9/14.7
D194	1750000550	S.DIO	1SS355 TE-17	T	56.1/39.6
D195	1790001561	S.DIO	1SS372(TE85R,F)	T	63.3/33.2
D272	1790000491	S.DIO	HSM88ASTR-E	B	85.1/44

[MAIN-1 UNIT]

REF NO.	PARTS NO.	DESCRIPTION		M.	H/V LOCATION
D273	1790001621	S.DIO	1SV308(TPL3,F)	B	41.1/52.5
D274	1790000491	S.DIO	HSM88ASTR-E	B	73.9/49.3
D401	1730002260	S.ZEN	MA8030-H(TX)	B	22.5/58.1
D470	1730002360	S.ZEN	MA8062-M(TX)	T	14.1/69.1
D471	1720000471	S.VAR	1SV239(TPH3,F)	T	20.8/76.9
D630	1720000691	S.VAR	1SV282(TPH2,F)	T	13.8/41.3
D631	1720000401	S.VAR	1SV245(TPH3,F)	T	16.6/31
D632	1790001260	S.DIO	MA2S077-(TX)	T	13.6/35.9
D633	1730002300	S.ZEN	MA8082-M(TX)	T	35.3/38.7
D710	1790001621	S.DIO	1SV308(TPL3,F)	B	41.8/64.6
D711	1790001621	S.DIO	1SV308(TPL3,F)	B	41.5/69.5
D770	1750000581	S.DIO	1SV307(TPH3,F)	B	31.2/39.9
D771	1750000581	S.DIO	1SV307(TPH3,F)	B	29/44.3
D1080	1730002300	S.ZEN	MA8082-M(TX)	B	83.1/67.6
D1160	1750000760	S.DIO	MA4PH224 (MA4P1250-1072T)	T	90.9/106.4
D1161	1750000760	S.DIO	MA4PH224 (MA4P1250-1072T)	T	81/108.5
D1162	1750000760	S.DIO	MA4PH224 (MA4P1250-1072T)	T	77.8/111.5
D1164	1720000361	S.DIO	HSU88TRF-E	T	88.4/121.8
D1165	1720000361	S.DIO	HSU88TRF-E	B	93.1/126.3
D1166	1720000361	S.DIO	HSU88TRF-E	T	95.7/109.5
D1168	1790001040	S.ZEN	MA8033-L(TX)	B	64.7/119.1
D1169	1790001040	S.ZEN	MA8033-L(TX)	B	64.7/122.4
D1170	1720000361	S.DIO	HSU88TRF-E	T	111.9/118
D1250	1720000361	S.DIO	HSU88TRF-E	T	69.1/124.2
D1251	1720000361	S.DIO	HSU88TRF-E	B	71.6/121.4
D1252	1720000361	S.DIO	HSU88TRF-E	B	74.6/120.2
D1254	1790001260	S.DIO	MA2S077-(TX)	B	80/121.3
D1330	1790000700	DIO	DSA3A1		
D1331	1750000550	S.DIO	1SS355 TE-17	B	68.1/70.7
D1332	1750000550	S.DIO	1SS355 TE-17	T	27.3/92
D1333	1750000550	S.DIO	1SS355 TE-17	T	29.1/92
D1600	1730002280	S.ZEN	MA8091-M(TX)	B	111.9/23.8
D1602	1730002280	S.ZEN	MA8091-M(TX)	B	105.9/11
D1604	1750000550	S.DIO	1SS355 TE-17	T	108.2/14.6
D1605	1730002280	S.ZEN	MA8091-M(TX)	B	111.9/12.4
D1606	1730002280	S.ZEN	MA8091-M(TX)	B	99.7/12.6
D1750	1730002300	S.ZEN	MA8082-M(TX)	T	26.4/121.3
D1800	1750000550	S.DIO	1SS355 TE-17	T	13.5/23.2
D1801	1750000550	S.DIO	1SS355 TE-17	T	8.6/22.3
FI1	2040001660	S.FIL	LFB431G28SN1A362 (LFSN30N18C1)	T	51.3/100.6
FI2	2040001660	S.FIL	LFB431G28SN1A362 (LFSN30N18C1)	T	48.5/86.2
FI71	2040001650	S.SAW	WF447B-T	T	47.2/67.9
FI191	2010002440	S.XTA	DSF753SB 31.05 MHz(FL-312)	T	45.6/43.1
FI192	2020001920	CER	CFWLB450KE1Y-B0 (CFWM450EY)		
FI193	2020001460	CER	CFWLA450KHFA-B0 (CFWS450HT)		
FI272	2020002190	CER	SFELF10M7HA0G-B0		
FI273	2020002190	CER	SFELF10M7HA0G-B0		
FI880	2040001650	S.SAW	WF447B-T	T	51.2/52.5
FI961	2040001360	S.FIL	LFB431G27AL1A303	T	63.6/62.6
FI1020	2040001360	S.FIL	LFB431G27AL1A303	T	85/48.4
X191	6070000191	S.DIS	CDBKB450KCAY24-R0	T	57.5/28.1
X271	6070000250	S.DIS	CDSCB10M7GF122-R0	T	75.3/31
X400	6050011931	S.XTA	CR-781A TTS14VSB-A3 15.3 MHz	T	14.3/55.7
L1	6200006030	S.COI	LQP18MN4N7C02D	T	66.8/105.6
L2	6200006020	S.COI	LQP18MN3N9C02D	T	64.7/108.8
L3	6200006030	S.COI	LQP18MN4N7C02D	T	60.5/105.3
L4	6200006060	S.COI	LQP18MN8N2C02D	T	59.2/105.3
L5	6200006040	S.COI	LQP18MN5N6C02D	T	56.6/102.5
L6	6200006050	S.COI	LQP18MN6N8C02D	T	49.4/95.4
L7	6200009950	S.COI	LQP18MN3N3C02D	T	55.2/90.6
L71	6200006991	S.COI	ELJRE 56NGFA	T	40.4/78.9
L72	6200006991	S.COI	ELJRE 56NGFA	T	47.5/72.2
L73	6200006991	S.COI	ELJRE 56NGFA	T	42.3/68.8
L74	6200009351	S.COI	ELJRE R22GFA	T	41.5/61.3
L131	6200002710	S.COI	ELJFC 1R8K-F	T	41.8/55.5
L132	6200001981	S.COI	NLV25T-1R0J	T	41.8/52.1
L191	6200002710	S.COI	ELJFC 1R8K-F	T	50.1/35.8
L192	6200002001	S.COI	NLV25T-3R3J	T	44.6/48.8
L271	6200011820	S.COI	1812CS-562XJLC	T	75/34.6
L390	6200006991	S.COI	ELJRE 56NGFA	T	31.4/53.4
L391	6200006991	S.COI	ELJRE 56NGFA	T	37/51.3
L400	6200006991	S.COI	ELJRE 56NGFA	T	9.4/66.9
L404	6200006991	S.COI	ELJRE 56NGFA	B	14.9/63.7
L415	6200006991	S.COI	ELJRE 56NGFA	T	9.4/49.4
L470	6200006991	S.COI	ELJRE 56NGFA	T	23.5/69.5
L471	6200005641	S.COI	ELJRE 6N8ZFA	T	25.1/71.2
L472	6200009390	S.COI	C3328A-8N0J-A	T	24.6/78.2
L473	6200002631	S.COI	NLV25T-R10J	T	20/79.4
L474	6200005621	S.COI	ELJRE 4N7ZFA	T	32.2/67.6
L475	6200005641	S.COI	ELJRE 6N8ZFA	T	32.2/70.2
L476	6200005651	S.COI	ELJRE 8N2ZFA	T	35.3/73.4
L477	6200005641	S.COI	ELJRE 6N8ZFA	T	35.3/77.3
L480	6200005641	S.COI	ELJRE 6N8ZFA	B	27.5/74.6
L481	6200006991	S.COI	ELJRE 56NGFA	T	14.3/77.8
L550	6200001981	S.COI	NLV25T-1R0J	B	21.7/36.1
L551	6200001981	S.COI	NLV25T-1R0J	T	28.3/51
L552	6200001981	S.COI	NLV25T-1R0J	T	33.8/49.3
L554	6200006991	S.COI	ELJRE 56NGFA	B	24.9/37.6
L555	6200009351	S.COI	ELJRE R22GFA	B	23.7/27.5
L556	6200009351	S.COI	ELJRE R22GFA	B	2.5/44.9
L557	6200009351	S.COI	ELJRE R22GFA	T	4/29.7
L630	6200009700	S.COI	C6328A-28NG-A	T	17.7/39.1
L631	6200005701	S.COI	ELJRE 22NGFA	B	21.4/30.4
L632	6200006991	S.COI	ELJRE 56NGFA	T	32.8/30.8

M.=Mounted side (T: Mounted on the Top side, B: Mounted on the Bottom side)
S.=Surface mount

[MAIN-1 UNIT]

REF NO.	PARTS NO.	DESCRIPTION	M.	H/V LOCATION
L633	6200001981	S.COI NLV25T-1R0J	T	17.7/43.9
L634	6200006991	S.COI ELJRE 56NGFA	T	12.4/30.1
L636	6200006991	S.COI ELJRE 56NGFA	T	26.7/33.5
L710	6200006991	S.COI ELJRE 56NGFA	B	38.8/60.3
L712	6200006991	S.COI ELJRE 56NGFA	T	38.4/76.7
L713	6200005621	S.COI ELJRE 4N7ZFA	B	36.7/68.7
L714	6200005641	S.COI ELJRE 6N8ZFA	B	36.4/74.3
L715	6200006991	S.COI ELJRE 56NGFA	B	32.1/77.1
L717	6200006991	S.COI ELJRE 56NGFA	T	9.9/69.5
L718	6200006991	S.COI ELJRE 56NGFA	T	35.3/58.6
L719	6200006991	S.COI ELJRE 56NGFA	T	39/68.7
L720	6200006991	S.COI ELJRE 56NGFA	T	36.2/55.9
L770	6200005701	S.COI ELJRE 22NGFA	B	31/50.4
L880	6200006991	S.COI ELJRE 56NGFA	T	50.6/46.5
L881	6200006991	S.COI ELJRE 56NGFA	T	46.2/53.6
L891	6200005711	S.COI ELJRE 27NGFA	B	40.9/45
L892	6200005721	S.COI ELJRE 33NGFA	T	47.5/58.8
L893	6200005731	S.COI ELJRE 39NGFA	T	47.5/61.4
L895	6200006991	S.COI ELJRE 56NGFA	B	38.2/36.5
L896	6200006991	S.COI ELJRE 56NGFA	B	37.5/38.6
L897	6200006991	S.COI ELJRE 56NGFA	T	52.5/39.5
L898	6200001981	S.COI NLV25T-1R0J	T	50.2/38.7
L961	6200006991	S.COI ELJRE 56NGFA	B	52.6/64.6
L962	6200005651	S.COI ELJRE 8N2ZFA	B	55.5/61.8
L964	6200006991	S.COI ELJRE 56NGFA	B	43.6/81
L1020	6200006991	S.COI ELJRE 56NGFA	B	69.3/54.1
L1021	6200005661	S.COI ELJRE 10NGFA	T	72.8/53.8
L1080	6200006771	S.COI ELJRE 1N5ZFA	B	100.6/43.6
L1081	6200013080	S.COI 0.25-1.9-10TL 97.0N <COMO>	T	112.1/45.6
L1082	6200007740	S.COI LQW2BHN47NJ03L	T	107.3/48.1
L1085	6200006991	S.COI ELJRE 56NGFA	T	106.5/50.4
L1086	6200006991	S.COI ELJRE 56NGFA	T	99.8/46.7
L1087	6200006991	S.COI ELJRE 56NGFA	B	80.9/106.5
L1161	6200009700	S.COI C6328A-28NG-A	T	105.2/95.9
L1162	6200009410	S.COI C3328A-2N5K-A	T	85.1/108.6
L1163	6200009410	S.COI C3328A-2N5K-A	T	73.7/107.3
L1164	6200006991	S.COI ELJRE 56NGFA	B	97.4/127.1
L1166	6200009700	S.COI C6328A-28NG-A	T	93/83.6
L1167	6200008911	S.COI 1812CS-122XJLC	T	101.1/84.8
L1169	6200006991	S.COI ELJRE 56NGFA	T	113.2/69.8
L1170	6200006991	S.COI ELJRE 56NGFA	B	82.7/114
L1250	6200005741	S.COI ELJRE 47NGFA	B	60.8/126.1
L1251	6200006991	S.COI ELJRE 56NGFA	B	76.2/113
L1330	6200006991	S.COI ELJRE 56NGFA	T	21.2/93.5
L1331	6200006991	S.COI ELJRE 56NGFA	B	22.9/92.3
L1332	6200006991	S.COI ELJRE 56NGFA	B	22.5/91
L1333	6200006991	S.COI ELJRE 56NGFA	B	45.2/81
L1334	6200006991	S.COI ELJRE 56NGFA	B	53.9/71.6
L1335	6200006991	S.COI ELJRE 56NGFA	B	62.2/76.6
L1348	6200006991	S.COI ELJRE 56NGFA	B	51.8/67.2
L1349	6200006991	S.COI ELJRE 56NGFA	B	58.7/57.8
L1360	6200006991	S.COI ELJRE 56NGFA	T	37.4/53.2
L1400	6200006991	S.COI ELJRE 56NGFA	T	12.7/48.8
L1401	6200006991	S.COI ELJRE 56NGFA	T	59.4/1.4
L1550	6200006991	S.COI ELJRE 56NGFA	B	17.7/56.8
L1601	6200006991	S.COI ELJRE 56NGFA	T	114.7/13.9
L1602	6200006991	S.COI ELJRE 56NGFA	T	106.3/16.7
L1603	6200006991	S.COI ELJRE 56NGFA	T	106.3/14.3
L1604	6200006991	S.COI ELJRE 56NGFA	T	112.2/11.9
L1606	6200006991	S.COI ELJRE 56NGFA	B	114.8/10.8
L1607	6200006991	S.COI ELJRE 56NGFA	T	115.8/11.9
L1608	6200006991	S.COI ELJRE 56NGFA	B	95.2/.9
L1609	6200006991	S.COI ELJRE 56NGFA	B	.9/51
L1610	6200006991	S.COI ELJRE 56NGFA	T	105.3/11.8
L1611	6200006991	S.COI ELJRE 56NGFA	B	108.3/6.8
L1612	6200003590	S.COI EXCCL3225U1	B	1.8/80.4
L1613	6200003590	S.COI EXCCL3225U1	B	13.7/124.3
L1614	6200003590	S.COI EXCCL3225U1	B	12.9/129.4
L1801	6200006991	S.COI ELJRE 56NGFA	B	27.4/103.3
L1802	6200006991	S.COI ELJRE 56NGFA	B	26.6/102
L1803	6200006991	S.COI ELJRE 56NGFA	B	26.2/100.7
L1804	6200006991	S.COI ELJRE 56NGFA	B	26.2/99.4
L1805	6200006991	S.COI ELJRE 56NGFA	B	54.5/108.5
R1	7030003320	S.RES ERJ3GEYJ 101 V (100)	T	55.4/106.3
R2	7030003320	S.RES ERJ3GEYJ 101 V (100)	T	56.6/98.5
R3	7030003630	S.RES ERJ3GEYJ 393 V (39K)	T	53.5/93.2
R4	7030003600	S.RES ERJ3GEYJ 223 V (22K)	T	49.4/92.8
R5	7030003320	S.RES ERJ3GEYJ 101 V (100)	T	55.2/89.3
R6	7030003320	S.RES ERJ3GEYJ 101 V (100)	T	55.2/88
R7	7030003340	S.RES ERJ3GEYJ 151 V (150)	B	47.5/85.1
R8	7030003270	S.RES ERJ3GEYJ 390 V (39)	B	47.5/83.7
R9	7030003340	S.RES ERJ3GEYJ 151 V (150)	B	51.1/82.3
R70	7030003200	S.RES ERJ3GEYJ 100 V (10)	T	40.7/76.6
R71	7030003320	S.RES ERJ3GEYJ 101 V (100)	T	44.4/73.8
R78	7030003710	S.RES ERJ3GEYJ 184 V (180K)	T	93.6/27.4
R84	7030003560	S.RES ERJ3GEYJ 103 V (10K)	T	91/28.7
R85	7030003680	S.RES ERJ3GEYJ 104 V (100K)	T	95.5/27.4
R87	7030003790	S.RES ERJ3GEYJ 824 V (820K)	T	98.2/23
R91	7030003430	S.RES ERJ3GEYJ 821 V (820)	B	105.3/24.9
R92	7030003680	S.RES ERJ3GEYJ 104 V (100K)	T	95.5/30
R93	7030003560	S.RES ERJ3GEYJ 103 V (10K)	T	93.6/30
R94	7030003630	S.RES ERJ3GEYJ 393 V (39K)	T	98.9/32.9
R131	7030003600	S.RES ERJ3GEYJ 223 V (22K)	T	44.2/61.3
R132	7030003560	S.RES ERJ3GEYJ 103 V (10K)	T	44.8/60
R133	7030003300	S.RES ERJ3GEYJ 680 V (68)	T	44.3/56.1
R134	7030003320	S.RES ERJ3GEYJ 101 V (100)	T	50.9/72.9
R135	7030003440	S.RES ERJ3GEYJ 102 V (1K)	B	39.1/54.5
R136	7030003440	S.RES ERJ3GEYJ 102 V (1K)	T	40.2/49.8
R144	7030003520	S.RES ERJ3GEYJ 472 V (4.7K)	T	37.6/26
R188	7030003320	S.RES ERJ3GEYJ 101 V (100)	T	58.4/43.8
R189	7030003320	S.RES ERJ3GEYJ 101 V (100)	T	53.5/13.8
R190	7030003320	S.RES ERJ3GEYJ 101 V (100)	T	54.8/13.6

[MAIN-1 UNIT]

REF NO.	PARTS NO.	DESCRIPTION	M.	H/V LOCATION
R191	7030003680	S.RES ERJ3GEYJ 104 V (100K)	T	47.4/36.3
R192	7030003460	S.RES ERJ3GEYJ 152 V (1.5K)	T	44.8/37.5
R193	7030003400	S.RES ERJ3GEYJ 471 V (470)	T	52.5/36.1
R194	7030003280	S.RES ERJ3GEYJ 470 V (47)	T	51.8/33.3
R195	7030003450	S.RES ERJ3GEYJ 122 V (1.2K)	T	52.9/27.9
R196	7030003460	S.RES ERJ3GEYJ 152 V (1.5K)	T	40.2/32.4
R197	7030003560	S.RES ERJ3GEYJ 103 V (10K)	T	51.9/18.7
R198	7030003560	S.RES ERJ3GEYJ 103 V (10K)	T	56.7/15.7
R199	7030003320	S.RES ERJ3GEYJ 101 V (100)	T	38.3/50.1
R200	7030003560	S.RES ERJ3GEYJ 103 V (10K)	T	56.7/14.4
R201	7030003570	S.RES ERJ3GEYJ 123 V (12K)	B	48/27.2
R202	7030003570	S.RES ERJ3GEYJ 123 V (12K)	B	45.8/24.9
R203	7030003720	S.RES ERJ3GEYJ 224 V (220K)	T	41/27.9
R204	7030003740	S.RES ERJ3GEYJ 334 V (330K)	T	39.9/24.7
R205	7030003500	S.RES ERJ3GEYJ 332 V (3.3K)	T	43.6/23.8
R206	7510001530	S.THE NTCG20 3NH 103JT	T	42/23.8
R207	7030003680	S.RES ERJ3GEYJ 104 V (100K)	T	39.9/22.8
R208	7030003600	S.RES ERJ3GEYJ 223 V (22K)	T	43.2/26
R209	7030003440	S.RES ERJ3GEYJ 102 V (1K)	T	48.4/25.1
R210	7030003440	S.RES ERJ3GEYJ 102 V (1K)	T	51.1/26
R211	7030003680	S.RES ERJ3GEYJ 104 V (100K)	T	50.3/24.1
R212	7030003550	S.RES ERJ3GEYJ 822 V (8.2K)	T	54.5/34.7
R213	7030003620	S.RES ERJ3GEYJ 333 V (33K)	T	56.1/36.1
R214	7030003640	S.RES ERJ3GEYJ 473 V (47K)	T	54.8/32.8
R215	7030003600	S.RES ERJ3GEYJ 223 V (22K)	T	58/35.6
R216	7030003460	S.RES ERJ3GEYJ 152 V (1.5K)	T	58.9/32.8
R217	7030003320	S.RES ERJ3GEYJ 101 V (100)	T	54.8/37.3
R218	7030003640	S.RES ERJ3GEYJ 473 V (47K)	T	62.7/29.9
R219	7030003560	S.RES ERJ3GEYJ 103 V (10K)	T	57.4/24
R270	7510001701	S.THE NTCG16 4LH 154JT	T	83.1/28.5
R271	7030003680	S.RES ERJ3GEYJ 104 V (100K)	T	80.5/27.9
R272	7030003860	S.RES ERJ3GE JPW V	B	86.8/30.4
R273	7030003640	S.RES ERJ3GEYJ 473 V (47K)	T	84.5/28.5
R274	7030003680	S.RES ERJ3GEYJ 104 V (100K)	B	87.1/31.7
R276	7030003480	S.RES ERJ3GEYJ 222 V (2.2K)	T	78.6/30.9
R277	7030003280	S.RES ERJ3GEYJ 470 V (47)	T	74.2/37.6
R278	7030003860	S.RES ERJ3GE JPW V	B	83/39.3
R279	7030003640	S.RES ERJ3GEYJ 473 V (47K)	T	63.2/41.1
R280	7030003640	S.RES ERJ3GEYJ 473 V (47K)	T	57.6/41.9
R281	7030003380	S.RES ERJ3GEYJ 331 V (330)	T	68.1/40.6
R282	7030003570	S.RES ERJ3GEYJ 123 V (12K)	B	42.2/53.9
R283	7030003640	S.RES ERJ3GEYJ 473 V (47K)	T	66.5/43.5
R284	7030003320	S.RES ERJ3GEYJ 101 V (100)	T	69.4/40.6
R285	7030003380	S.RES ERJ3GEYJ 331 V (330)	B	79.8/45.5
R287	7030003320	S.RES ERJ3GEYJ 101 V (100)	B	73.9/41.7
R288	7030003360	S.RES ERJ3GEYJ 221 V (220)	B	75.8/41.3
R289	7030003580	S.RES ERJ3GEYJ 153 V (15K)	B	77.1/42.7
R291	7030003680	S.RES ERJ3GEYJ 104 V (100K)	T	71.3/22.7
R292	7510001671	S.THR NTCG16 4BH 103JT	T	72.1/40.3
R293	7030003450	S.RES ERJ3GEYJ 122 V (1.2K)	T	72.1/42.9
R294	7030003370	S.RES ERJ3GEYJ 271 V (270)	B	46.3/50.7
R295	7030003380	S.RES ERJ3GEYJ 331 V (330)	T	66.6/46.4
R296	7030005331	S.RES ERA3YED 562V (5.6K)	T	73.4/40.3
R331	7030003770	S.RES ERJ3GEYJ 564 V (560K)	B	81.6/124.3
R340	7030003520	S.RES ERJ3GEYJ 472 V (4.7K)	T	66.6/35.7
R394	7030003360	S.RES ERJ3GEYJ 221 V (220)	T	28.7/53.5
R400	7030003440	S.RES ERJ3GEYJ 102 V (1K)	B	25.2/54.9
R401	7030003440	S.RES ERJ3GEYJ 102 V (1K)	B	28.4/56.8
R402	7030003440	S.RES ERJ3GEYJ 102 V (1K)	B	31.6/68.9
R403	7030003440	S.RES ERJ3GEYJ 102 V (1K)	B	29.9/58.6
R404	7030003440	S.RES ERJ3GEYJ 102 V (1K)	B	31.5/59.4
R405	7030003290	S.RES ERJ3GEYJ 560 V (56)	B	27.9/70.5
R406	7030003460	S.RES ERJ3GEYJ 152 V (1.5K)	B	18.8/73.4
R407	7030003440	S.RES ERJ3GEYJ 102 V (1K)	B	20.7/74.3
R409	7030003320	S.RES ERJ3GEYJ 101 V (100)	T	23/55.7
R410	7030003660	S.RES ERJ3GEYJ 683 V (68K)	T	23/54.4
R411	7030003440	S.RES ERJ3GEYJ 102 V (1K)	T	20.8/49.7
R412	7030003670	S.RES ERJ3GEYJ 823 V (82K)	T	20.4/51.7
R413	7030003360	S.RES ERJ3GEYJ 221 V (220)	T	21/55
R414	7030003560	S.RES ERJ3GEYJ 103 V (10K)	T	23/57.1
R415	7030003320	S.RES ERJ3GEYJ 101 V (100)	T	11/50.7
R416	7030003320	S.RES ERJ3GEYJ 101 V (100)	T	20.3/57.1
R417	7030003490	S.RES ERJ3GEYJ 272 V (2.7K)	B	25.2/56.4
R418	7030003490	S.RES ERJ3GEYJ 272 V (2.7K)	B	27.1/59
R419	7030003490	S.RES ERJ3GEYJ 272 V (2.7K)	B	31/61.3
R420	7030003460	S.RES ERJ3GEYJ 152 V (1.5K)	B	32.3/64.5
R421	7030003350	S.RES ERJ3GEYJ 181 V (180)	T	22/59
R422	7030003440	S.RES ERJ3GEYJ 102 V (1K)	B	15.4/78.2
R470	7030003360	S.RES ERJ3GEYJ 221 V (220)	T	14.9/71.5
R471	7030006571	S.RES ERA3YED 392V (3.9K)	T	27.5/74
R472	7030005331	S.RES ERA3YED 562V (5.6K)	T	27.3/76.7
R473	7030005331	S.RES ERA3YED 562V (5.6K)	T	21.2/72.7
R474	7030003400	S.RES ERJ3GEYJ 471 V (470)	T	21.2/75.3
R475	7030003360	S.RES ERJ3GEYJ 221 V (220)	T	26.7/67.6
R476	7030003650	S.RES ERJ3GEYJ 563 V (56K)	T	28/67.6
R478	7030003320	S.RES ERJ3GEYJ 101 V (100)	T	27.3/69.5
R479	7030003420	S.RES ERJ3GEYJ 681 V (680)	T	35.4/66.8
R480	7030003370	S.RES ERJ3GEYJ 271 V (270)	B	36.1/76.5
R481	7030003280	S.RES ERJ3GEYJ 470 V (47)	T	29.9/75.7
R483	7030003650	S.RES ERJ3GEYJ 563 V (56K)	B	29.3/74.7
R484	7030003320	S.RES ERJ3GEYJ 101 V (100)	B	28.7/78.1
R485	7030003240	S.RES ERJ3GEYJ 220 V (22)	T	31.3/65.7
R486	7030003320	S.RES ERJ3GEYJ 101 V (100)	T	14.9/72.7
R487	7030007230	S.RES ERA3YED 102V (1K)	T	21.9/79
R550	7030003290	S.RES ERJ3GEYJ 560 V (56)	B	18.2/34.1
R551	7030003440	S.RES ERJ3GEYJ 102 V (1K)	B	11.1/27.5
R552	7030003440	S.RES ERJ3GEYJ 102 V (1K)	B	9.5/26.7
R553	7030003440	S.RES ERJ3GEYJ 102 V (1K)	B	7.9/27.5
R554	7030003440	S.RES ERJ3GEYJ 102 V (1K)	B	6.3/26.7
R555	7030003440	S.RES ERJ3GEYJ 102 V (1K)	B	10.1/40.8
R556	7030003460	S.RES ERJ3GEYJ 152 V (1.5K)	B	7.3/40.8
R557	7030003320	S.RES ERJ3GEYJ 101 V (100)	B	10.1/42.4
R558	7030003320	S.RES ERJ3GEYJ 101 V (100)	B	23.3/39.8
R559	7030003450	S.RES ERJ3GEYJ 122 V (1.2K)	T	8.6/36.7

M.=Mounted side (T: Mounted on the Top side, B: Mounted on the Bottom side)
S.=Surface mount

[MAIN-1 UNIT]

REF NO.	PARTS NO.	DESCRIPTION	M.	H/V LOCATION
R560	7030003430	S.RES ERJ3GEYJ 821 V (820)	T	6.7/34.7
R561	7030003440	S.RES ERJ3GEYJ 102 V (1K)	T	8.6/34.1
R562	7030003780	S.RES ERJ3GEYJ 684 V (680K)	T	25.2/50.4
R630	7030003440	S.RES ERJ3GEYJ 102 V (1K)	T	18.6/32
R631	7030003640	S.RES ERJ3GEYJ 473 V (47K)	T	15.9/33.2
R632	7030003440	S.RES ERJ3GEYJ 102 V (1K)	T	20/42.8
R633	7030003560	S.RES ERJ3GEYJ 103 V (10K)	T	14.1/34
R634	7030003560	S.RES ERJ3GEYJ 103 V (10K)	T	14.4/37.8
R635	7030003640	S.RES ERJ3GEYJ 473 V (47K)	T	12.8/34
R636	7030003490	S.RES ERJ3GEYJ 272 V (2.7K)	T	22.6/35.8
R637	7030003490	S.RES ERJ3GEYJ 272 V (2.7K)	T	20.9/33.4
R638	7030003420	S.RES ERJ3GEYJ 681 V (680)	T	21.3/29.6
R639	7030003320	S.RES ERJ3GEYJ 101 V (100)	T	24.6/35.4
R640	7030003320	S.RES ERJ3GEYJ 101 V (100)	T	25.9/35.4
R642	7030003650	S.RES ERJ3GEYJ 563 V (56K)	T	27.1/30.2
R643	7030003290	S.RES ERJ3GEYJ 560 V (56)	T	28.6/38.2
R644	7030003360	S.RES ERJ3GEYJ 221 V (220)	B	28.7/35.2
R645	7030003320	S.RES ERJ3GEYJ 101 V (100)	B	28.7/31
R646	7030003670	S.RES ERJ3GEYJ 823 V (82K)	B	26.3/31.8
R647	7030003380	S.RES ERJ3GEYJ 331 V (330)	B	23.8/31.2
R648	7030003320	S.RES ERJ3GEYJ 101 V (100)	B	25.5/33.9
R649	7030003360	S.RES ERJ3GEYJ 221 V (220)	T	32/34.8
R650	7030003440	S.RES ERJ3GEYJ 102 V (1K)	T	18.2/30.1
R651	7030003440	S.RES ERJ3GEYJ 102 V (1K)	T	13.1/32.1
R710	7030003370	S.RES ERJ3GEYJ 271 V (270)	B	40.1/61.9
R711	7030003370	S.RES ERJ3GEYJ 271 V (270)	T	38.4/73.6
R712	7030003340	S.RES ERJ3GEYJ 151 V (150)	B	42.3/67.7
R715	7030003320	S.RES ERJ3GEYJ 101 V (100)	B	32.1/79.9
R716	7030003650	S.RES ERJ3GEYJ 563 V (56K)	B	38.7/75.2
R770	7030003440	S.RES ERJ3GEYJ 102 V (1K)	B	35.6/34.9
R771	7030003520	S.RES ERJ3GEYJ 472 V (4.7K)	B	31.5/35.2
R772	7030003440	S.RES ERJ3GEYJ 102 V (1K)	B	33.6/50.7
R773	7030003520	S.RES ERJ3GEYJ 472 V (4.7K)	B	31/48.8
R775	7030003270	S.RES ERJ3GEYJ 390 V (39)	T	36.2/57.2
R777	7030003480	S.RES ERJ3GEYJ 222 V (2.2K)	T	28.6/43.9
R778	7030003440	S.RES ERJ3GEYJ 102 V (1K)	T	26.7/41.8
R779	7030003650	S.RES ERJ3GEYJ 563 V (56K)	T	26.5/38
R780	7030003320	S.RES ERJ3GEYJ 101 V (100)	T	24.6/38.9
R781	7030003650	S.RES ERJ3GEYJ 563 V (56K)	T	26.7/43.1
R830	7030006461	S.RES ERA3YED 152V (1.5K)	B	43.6/35.9
R831	7030009591	S.RES ERA3YED 472V (4.7K)	B	42/36.2
R832	7030009891	S.RES ERA3YED 151V (150)	B	42.8/34
R833	7030003320	S.RES ERJ3GEYJ 101 V (100)	B	56.3/28.5
R834	7030005341	S.RES ERA3YED 332V (3.3K)	B	59.2/37.5
R835	7030009591	S.RES ERA3YED 472V (4.7K)	B	56.6/38.7
R836	7030003320	S.RES ERJ3GEYJ 101 V (100)	B	54.8/36
R837	7030005341	S.RES ERA3YED 332V (3.3K)	B	61.2/28.5
R838	7030009591	S.RES ERA3YED 472V (4.7K)	B	58.4/28.5
R839	7030003320	S.RES ERJ3GEYJ 101 V (100)	B	50.3/34
R842	7030003320	S.RES ERJ3GEYJ 101 V (100)	B	46.3/35.5
R845	7030003440	S.RES ERJ3GEYJ 102 V (1K)	B	43.1/31.1
R847	7030003440	S.RES ERJ3GEYJ 102 V (1K)	B	41.9/31.1
R848	7030003440	S.RES ERJ3GEYJ 102 V (1K)	B	48.6/32.1
R849	7030006461	S.RES ERA3YED 152V (1.5K)	B	61.3/33.9
R850	7030007230	S.RES ERA3YED 102V (1K)	B	64.7/34.7
R851	7030005351	S.RES ERA3YED 182V (1.8K)	B	62.1/31.4
R852	7030005351	S.RES ERA3YED 182V (1.8K)	B	63.2/36.5
R890	7030003640	S.RES ERJ3GEYJ 473 V (47K)	B	35.4/37.5
R891	7030003400	S.RES ERJ3GEYJ 471 V (470)	B	38.1/44.3
R892	7030003400	S.RES ERJ3GEYJ 471 V (470)	B	35.4/42.6
R893	7030003200	S.RES ERJ3GEYJ 100 V (10)	B	38.9/42.2
R895	7030003320	S.RES ERJ3GEYJ 101 V (100)	B	35.6/36.2
R897	7030003290	S.RES ERJ3GEYJ 560 V (56)	B	47.4/41.9
R898	7030003320	S.RES ERJ3GEYJ 101 V (100)	B	45/35.9
R899	7030003290	S.RES ERJ3GEYJ 560 V (56)	B	54.4/47.1
R900	7030003860	S.RES ERJ3GE JPW V	B	54.2/44.9
R960	7030003370	S.RES ERJ3GEYJ 271 V (270)	T	60.4/60.6
R961	7030003320	S.RES ERJ3GEYJ 101 V (100)	B	49/64.8
R962	7030003290	S.RES ERJ3GEYJ 560 V (56)	B	45.6/58.3
R963	7030003370	S.RES ERJ3GEYJ 271 V (270)	B	55.2/64.6
R964	7030003230	S.RES ERJ3GEYJ 180 V (18)	B	60/63.5
R1020	7030003320	S.RES ERJ3GEYJ 101 V (100)	B	83.2/121.9
R1022	7030003300	S.RES ERJ3GEYJ 680 V (68)	T	66.8/58
R1023	7030003430	S.RES ERJ3GEYJ 821 V (820)	T	78.6/46.6
R1024	7030004030	S.RES ERJ3GEYJ 5R6 V (5.6)	T	79.4/48.5
R1025	7030003430	S.RES ERJ3GEYJ 821 V (820)	T	80.2/46.6
R1028	7030003430	S.RES ERJ3GEYJ 821 V (820)	B	88.6/41
R1029	7030004030	S.RES ERJ3GEYJ 5R6 V (5.6)	B	89.4/43.1
R1030	7030003430	S.RES ERJ3GEYJ 821 V (820)	B	90.8/40.9
R1080	7030003360	S.RES ERJ3GEYJ 221 V (220)	B	94.6/43.9
R1081	7030003460	S.RES ERJ3GEYJ 152 V (1.5K)	B	93/45.5
R1083	7030003350	S.RES ERJ3GEYJ 181 V (180)	B	76.3/69.9
R1084	7030003300	S.RES ERJ3GEYJ 680 V (68)	B	105.1/43.3
R1085	7030003420	S.RES ERJ3GEYJ 681 V (680)	T	107.3/45.9
R1086	7310005580	S.TRI TMC3ADCS3X (4.7K)	T	74.1/117.4
R1087	7310005580	S.TRI TMC3ADCS3X (4.7K)	T	79.9/118.3
R1088	7030003430	S.RES ERJ3GEYJ 821 V (820)	T	104.6/44
R1090	7030010970	S.RES ERJ1TYJ 151U	B	121.6/53.8
R1091	7030003320	S.RES ERJ3GEYJ 101 V (100)	T	110.4/69.8
R1160	7030010420	S.RES ERJ1TYJ 560U (56)	T	106.4/88.2
R1161	7030003520	S.RES ERJ3GEYJ 472 V (4.7K)	T	86.8/119.1
R1163	7030003560	S.RES ERJ3GEYJ 103 V (10K)	T	98.6/106.5
R1164	7030000260	S.RES MCR10EZHJ 100 (101)	T	99.8/109.5
R1165	7030003640	S.RES ERJ3GEYJ 473 V (47K)	B	95/127.9
R1167	7030000340	S.RES MCR10EZHJ 470 (471)	T	105.8/118
R1169	7030000500	S.RES MCR10EZHJ 10 K (103)	B	120.8/126.2
R1170	7030006260	S.RES ERJ12YJ471U (470)	B	67.7/121.6
R1172	7030000340	S.RES MCR10EZHJ 470 (471)	T	102.3/110.6
R1250	7030003530	S.RES ERJ3GEYJ 562 V (5.6K)	B	71.6/124.6
R1251	7310005600	S.TRI TMC3ADCJ3X (2.2K)	T	73.4/126.7
R1252	7030003480	S.RES ERJ3GEYJ 222 V (2.2K)	T	69.7/127.8
R1254	7030003410	S.RES ERJ3GEYJ 561 V (560)	B	70.3/127.1
R1255	7030003560	S.RES ERJ3GEYJ 103 V (10K)	B	75.9/127.1
R1256	7030003600	S.RES ERJ3GEYJ 223 V (22K)	B	87.6/125.1

[MAIN-1 UNIT]

REF NO.	PARTS NO.	DESCRIPTION	M.	H/V LOCATION
R1257	7030003600	S.RES ERJ3GEYJ 223 V (22K)	B	88.4/127.5
R1258	7030003320	S.RES ERJ3GEYJ 101 V (100)	B	77.6/121
R1259	7030003320	S.RES ERJ3GEYJ 101 V (100)	B	77/115.1
R1260	7030003560	S.RES ERJ3GEYJ 103 V (10K)	B	78.3/118.3
R1330	7030003200	S.RES ERJ3GEYJ 100 V (10)	B	64.6/102.8
R1331	7030003440	S.RES ERJ3GEYJ 102 V (1K)	B	66/104.9
R1332	7030003560	S.RES ERJ3GEYJ 103 V (10K)	B	65.8/75.5
R1333	7030003440	S.RES ERJ3GEYJ 102 V (1K)	T	64.1/74.4
R1334	7030000410	S.RES MCR10EZHJ 1.8K (182)	B	59.5/73.3
R1335	7030000410	S.RES MCR10EZHJ 1.8K (182)	B	59.5/75.3
R1336	7030007180	S.RES ERJ12YJ150U (15)	B	71.5/100
R1338	7030003520	S.RES ERJ3GEYJ 472 V (4.7K)	T	25.7/91.3
R1339	7030000100	S.RES MCR10EZHJ 4.7 (4R7)	B	28.8/98.4
R1340	7030003440	S.RES ERJ3GEYJ 102 V (1K)	T	25.2/93.2
R1342	7030003560	S.RES ERJ3GEYJ 103 V (10K)	B	37.1/91.9
R1343	7030003440	S.RES ERJ3GEYJ 102 V (1K)	T	35.4/94
R1344	7030003560	S.RES ERJ3GEYJ 103 V (10K)	B	40.2/90.1
R1345	7030003440	S.RES ERJ3GEYJ 102 V (1K)	T	42.1/90.1
R1346	7030003560	S.RES ERJ3GEYJ 103 V (10K)	B	42.9/91.1
R1347	7030003440	S.RES ERJ3GEYJ 102 V (1K)	B	45.7/91.1
R1348	7030003520	S.RES ERJ3GEYJ 472 V (4.7K)	B	60.6/57.8
R1349	7030003560	S.RES ERJ3GEYJ 103 V (10K)	B	57.4/55.7
R1350	7030003520	S.RES ERJ3GEYJ 472 V (4.7K)	B	60.7/53
R1351	7030003560	S.RES ERJ3GEYJ 103 V (10K)	B	58.7/55.2
R1352	7030003440	S.RES ERJ3GEYJ 102 V (1K)	B	86.9/37.5
R1353	7030003520	S.RES ERJ3GEYJ 472 V (4.7K)	B	37.5/33.9
R1411	7030003640	S.RES ERJ3GEYJ 473 V (47K)	T	48.6/18.8
R1412	7030003640	S.RES ERJ3GEYJ 473 V (47K)	T	43.1/18
R1413	7030003320	S.RES ERJ3GEYJ 101 V (100)	T	40.5/18
R1414	7030003800	S.RES ERJ3GEYJ 105 V (1M)	T	46.7/19.6
R1415	7030003800	S.RES ERJ3GEYJ 105 V (1M)	T	45.4/19.6
R1460	7030003670	S.RES ERJ3GEYJ 823 V (82K)	T	40.5/9.3
R1461	7030003670	S.RES ERJ3GEYJ 823 V (82K)	T	42.4/8.6
R1462	7030003670	S.RES ERJ3GEYJ 823 V (82K)	T	45.4/8.7
R1463	7030003690	S.RES ERJ3GEYJ 124 V (120K)	T	49.4/4.5
R1464	7030003680	S.RES ERJ3GEYJ 104 V (100K)	T	50.2/6.4
R1465	7030003740	S.RES ERJ3GEYJ 334 V (330K)	T	54.2/5.1
R1466	7030003700	S.RES ERJ3GEYJ 154 V (150K)	T	54.1/3.2
R1467	7030003320	S.RES ERJ3GEYJ 101 V (100)	T	52.8/7
R1468	7030003760	S.RES ERJ3GEYJ 474 V (470K)	T	51.5/6.4
R1469	7030003320	S.RES ERJ3GEYJ 101 V (100)	B	39.4/13.5
R1470	7030003560	S.RES ERJ3GEYJ 103 V (10K)	B	37.8/13.5
R1471	7030003560	S.RES ERJ3GEYJ 103 V (10K)	B	39.2/6.9
R1472	7030003800	S.RES ERJ3GEYJ 105 V (1M)	B	40/9.3
R1473	7030003800	S.RES ERJ3GEYJ 105 V (1M)	B	40/10.9
R1474	7030003570	S.RES ERJ3GEYJ 123 V (12K)	B	42.4/8.5
R1475	7030003570	S.RES ERJ3GEYJ 123 V (12K)	B	42.4/5.7
R1476	7030003570	S.RES ERJ3GEYJ 123 V (12K)	B	44/7.2
R1477	7030003570	S.RES ERJ3GEYJ 123 V (12K)	B	44/10.1
R1478	7030003670	S.RES ERJ3GEYJ 823 V (82K)	B	45/17.3
R1479	7030003640	S.RES ERJ3GEYJ 473 V (47K)	B	49.8/14.1
R1480	7030003520	S.RES ERJ3GEYJ 472 V (4.7K)	B	55/12.7
R1481	7030003520	S.RES ERJ3GEYJ 472 V (4.7K)	T	50.6/16.9
R1482	7030003790	S.RES ERJ3GEYJ 824 V (820K)	B	52.2/13.3
R1483	7030003690	S.RES ERJ3GEYJ 124 V (120K)	T	35.5/12.4
R1484	7030003640	S.RES ERJ3GEYJ 473 V (47K)	T	36.7/13.2
R1485	7030003640	S.RES ERJ3GEYJ 473 V (47K)	T	39.8/11.2
R1486	7030003640	S.RES ERJ3GEYJ 473 V (47K)	T	42.4/11.2
R1487	7030003650	S.RES ERJ3GEYJ 563 V (56K)	T	48.6/11.4
R1488	7030003600	S.RES ERJ3GEYJ 223 V (22K)	T	47.3/17.2
R1489	7030003750	S.RES ERJ3GEYJ 394 V (390K)	T	47.3/14.6
R1490	7030003320	S.RES ERJ3GEYJ 101 V (100)	B	60.5/10.7
R1491	7030003800	S.RES ERJ3GEYJ 105 V (1M)	T	7.6/71.7
R1492	7030003480	S.RES ERJ3GEYJ 222 V (2.2K)	T	7.6/73
R1493	7030003800	S.RES ERJ3GEYJ 105 V (1M)	T	7.8/75.3
R1494	7030003560	S.RES ERJ3GEYJ 103 V (10K)	T	7.1/79.6
R1495	7030003680	S.RES ERJ3GEYJ 104 V (100K)	B	62.1/10.7
R1496	7030003660	S.RES ERJ3GEYJ 683 V (68K)	T	39.2/6.7
R1550	7030003640	S.RES ERJ3GEYJ 473 V (47K)	B	16.5/54.2
R1551	7030003680	S.RES ERJ3GEYJ 104 V (100K)	B	6/55
R1552	7030003600	S.RES ERJ3GEYJ 223 V (22K)	T	5.3/63
R1553	7030003320	S.RES ERJ3GEYJ 101 V (100)	B	17.3/59.1
R1555	7030003680	S.RES ERJ3GEYJ 104 V (100K)	B	13.4/67.2
R1556	7030003510	S.RES ERJ3GEYJ 392 V (3.9K)	B	11/66.1
R1557	7030003440	S.RES ERJ3GEYJ 102 V (1K)	B	11/67.4
R1558	7030003440	S.RES ERJ3GEYJ 102 V (1K)	B	8.5/66.9
R1559	7030003560	S.RES ERJ3GEYJ 103 V (10K)	B	7.4/73.7
R1560	7030003590	S.RES ERJ3GEYJ 183 V (18K)	B	8.2/77.4
R1561	7030003400	S.RES ERJ3GEYJ 471 V (470)	T	16.7/115
R1562	7030007180	S.RES ERJ12YJ150U (15)	B	42.9/113.9
R1601	7030004050	S.RES ERJ3GEYJ 1R0 V (1)	B	113.5/18.1
R1602	7030004030	S.RES ERJ3GEYJ 5R6 V (5.6)	B	106.8/21.5
R1603	7030003390	S.RES ERJ3GEYJ 391 V (390)	B	106.8/22.8
R1605	7030003320	S.RES ERJ3GEYJ 101 V (100)	B	101.2/21.6
R1606	7030003560	S.RES ERJ3GEYJ 103 V (10K)	B	102/17.7
R1607	7030003570	S.RES ERJ3GEYJ 123 V (12K)	B	102/19.3
R1608	7030003600	S.RES ERJ3GEYJ 223 V (22K)	T	109.5/17.6
R1609	7030003560	S.RES ERJ3GEYJ 103 V (10K)	T	110.6/20.3
R1610	7030003480	S.RES ERJ3GEYJ 222 V (2.2K)	T	108.2/17.6
R1669	7030003680	S.RES ERJ3GEYJ 104 V (100K)	T	97.9/12.8
R1670	7030003500	S.RES ERJ3GEYJ 332 V (3.3K)	T	100.6/16.1
R1671	7030005331	S.RES ERA3YED 562V (5.6K)	T	100.6/14.8
R1672	7030003560	S.RES ERJ3GEYJ 103 V (10K)	T	95.6/14.9
R1674	7030003560	S.RES ERJ3GEYJ 103 V (10K)	T	5.3/84.8
R1678	7030003680	S.RES ERJ3GEYJ 104 V (100K)	T	100.6/13.5
R1679	7030003580	S.RES ERJ3GEYJ 153 V (15K)	T	97/18.9
R1680	7030003680	S.RES ERJ3GEYJ 104 V (100K)	T	92.8/14.5
R1681	7030003320	S.RES ERJ3GEYJ 101 V (100)	T	88.9/14.4
R1682	7030003420	S.RES ERJ3GEYJ 681 V (680)	T	90.8/15.2
R1683	7030003280	S.RES ERJ3GEYJ 470 V (47)	T	94.4/18.9
R1684	7030003800	S.RES ERJ3GEYJ 105 V (1M)	T	81.6/15
R1685	7030003800	S.RES ERJ3GEYJ 105 V (1M)	T	87/15.2
R1686	7030003510	S.RES ERJ3GEYJ 392 V (3.9K)	B	84.4/13
R1687	7030003750	S.RES ERJ3GEYJ 394 V (390K)	B	86.4/17

M.=Mounted side (T: Mounted on the Top side, B: Mounted on the Bottom side)
S.=Surface mount

[MAIN-1 UNIT]

REF NO.	PARTS NO.	DESCRIPTION	M.	H/V LOCATION
R1688	7030003740	S.RES ERJ3GEYJ 334 V (330K)	B	82/12.2
R1689	7030003680	S.RES ERJ3GEYJ 104 V (100K)	B	79.2/12.2
R1690	7030003320	S.RES ERJ3GEYJ 101 V (100)	B	79.4/10.6
R1691	7030003550	S.RES ERJ3GEYJ 822 V (8.2K)	B	86.4/13
R1693	7030003650	S.RES ERJ3GEYJ 563 V (56K)	B	86.8/18.8
R1695	7030003790	S.RES ERJ3GEYJ 824 V (820K)	B	80.4/13.8
R1696	7030003640	S.RES ERJ3GEYJ 473 V (47K)	B	84/18.6
R1697	7030003670	S.RES ERJ3GEYJ 823 V (82K)	B	84.3/24.2
R1698	7030003720	S.RES ERJ3GEYJ 224 V (220K)	B	84.3/21.5
R1699	7030003670	S.RES ERJ3GEYJ 823 V (82K)	B	83.4/27.3
R1700	7030003670	S.RES ERJ3GEYJ 823 V (82K)	B	81/26
R1704	7310005580	S.TRI TMC3ADCS3X (4.7K)	T	69.4/10.8
R1705	7030003520	S.RES ERJ3GEYJ 472 V (4.7K)	B	76.4/24.8
R1706	7030003580	S.RES ERJ3GEYJ 153 V (15K)	B	73.6/24.8
R1707	7310005590	S.TRI TMC3ADCJ5X (220K)	T	69.4/6.8
R1708	7030003480	S.RES ERJ3GEYJ 222 V (2.2K)	T	79/13.1
R1709	7030005331	S.RES ERA3YED 562V (5.6K)	T	79/14.4
R1710	7030003800	S.RES ERJ3GEYJ 105 V (1M)	T	79/15.7
R1711	7030003320	S.RES ERJ3GEYJ 101 V (100)	T	72.9/15.2
R1712	7030003320	S.RES ERJ3GEYJ 101 V (100)	B	73.6/19.9
R1713	7030003750	S.RES ERJ3GEYJ 394 V (390K)	B	73.6/18.3
R1714	7030003800	S.RES ERJ3GEYJ 105 V (1M)	B	76.4/18.3
R1715	7030003560	S.RES ERJ3GEYJ 103 V (10K)	T	6.1/82.8
R1716	7030003680	S.RES ERJ3GEYJ 104 V (100K)[USA-04]	B	5.6/87.9
	7030003680	S.RES ERJ3GEYJ 104 V (100K)[USA-05]		
	7030003560	S.RES ERJ3GEYJ 103 V (10K) [EUR-04]		
	7030003560	S.RES ERJ3GEYJ 103 V (10K) [EUR-05]		
	7030003680	S.RES ERJ3GEYJ 104 V (100K)[GEN-04]		
	7030003680	S.RES ERJ3GEYJ 104 V (100K)[GEN-05]		
	7030003680	S.RES ERJ3GEYJ 104 V (100K)[CHN-01]		
R1717	7030003680	S.RES ERJ3GEYJ 104 V (100K)	B	6.3/85.7
R1718	7030003740	S.RES ERJ3GEYJ 334 V (330K)[EUR-04]	B	6.3/83.5
	7030003740	S.RES ERJ3GEYJ 334 V (330K)[EUR-05]		
R1750	7030003680	S.RES ERJ3GEYJ 104 V (100K)	T	25.3/115.6
R1751	7030003440	S.RES ERJ3GEYJ 102 V (1K)	T	29.4/121.3
R1800	7030003640	S.RES ERJ3GEYJ 473 V (47K)	T	9.5/20.2
R1801	7030003600	S.RES ERJ3GEYJ 223 V (22K)	B	4.2/25.9
R1802	7030003600	S.RES ERJ3GEYJ 223 V (22K)	T	13.7/24.8
R1803	7030003320	S.RES ERJ3GEYJ 101 V (100)	T	61.9/6.9
R1804	7030003860	S.RES ERJ3GE JPW V	B	52.2/44.4
W11	7030008240	S.RES ERJ12Y0R00U	T	78.2/78.7
W296	7030003860	S.RES ERJ3GE JPW V	T	71/38.3
W340	7030003860	S.RES ERJ3GE JPW V	B	67.1/9.8
W404	7030003860	S.RES ERJ3GE JPW V	T	17.5/59.6
W428	7030003860	S.RES ERJ3GE JPW V	B	13.6/94.8
W429	7030003860	S.RES ERJ3GE JPW V	B	33.6/61.3
W480	7030003860	S.RES ERJ3GE JPW V	T	20.5/69.2
W550	7030003860	S.RES ERJ3GE JPW V	B	26/42.2
W700	7030003860	S.RES ERJ3GE JPW V	T	39/70.7
W896	7030000010	S.RES MCR10EZHJ JPW (000)	B	42.4/85.8
W1021	7030003860	S.RES ERJ3GE JPW V	T	66.8/60.6
W1022	7030003860	S.RES ERJ3GE JPW V	T	33.3/53.5
W1026	7030003860	S.RES ERJ3GE JPW V	T	18.1/26
W1029	7030008240	S.RES ERJ12Y0R00U	B	68.9/113
W1030	7030000010	S.RES MCR10EZHJ JPW (000)	B	112.2/1.7
W1032	7030000010	S.RES MCR10EZHJ JPW (000)	B	98.3/33.6
W1033	7030008240	S.RES ERJ12Y0R00U	B	21.6/53.5
W1083	7030003860	S.RES ERJ3GE JPW V	B	104.3/41.2
W1084	7030003860	S.RES ERJ3GE JPW V	B	101.9/42
W1089	7030003860	S.RES ERJ3GE JPW V	T	81.6/114.1
W1161	7030003860	S.RES ERJ3GE JPW V	T	36.1/23.8
W1166	7030003860	S.RES ERJ3GE JPW V	T	111.1/125.4
W1261	7030003860	S.RES ERJ3GE JPW V	B	73.1/127.1
W1262	7030003860	S.RES ERJ3GE JPW V	T	69.7/126.5
W1601	7030003860	S.RES ERJ3GE JPW V	T	86.8/23.9
W1670	7030003860	S.RES ERJ3GE JPW V	B	86/7.3
W1701	7030003860	S.RES ERJ3GE JPW V	B	76.4/23.1
W1750	7030003860	S.RES ERJ3GE JPW V	B	88/5
C2	4030009530	S.CER C1608 CH 1H 030B-T	T	67.6/107.5
C3	4030009540	S.CER C1608 CH 1H 1R5B-T	T	65/107.5
C4	4030009540	S.CER C1608 CH 1H 1R5B-T	T	62.4/107.2
C5	4030009510	S.CER C1608 CH 1H 010B-T	T	59.7/107.2
C6	4030007090	S.CER C1608 CH 1H 470J-T	T	54.1/106.3
C7	4030006860	S.CER C1608 JB 1H 102K-T	T	54.3/108.2
C8	4030007010	S.CER C1608 CH 1H 100D-T	T	57.5/108
C9	4030007090	S.CER C1608 CH 1H 470J-T	T	58.8/103.2
C10	4030006860	S.CER C1608 JB 1H 102K-T	T	58.8/101.9
C11	4030007010	S.CER C1608 CH 1H 100D-T	T	58.8/100.6
C12	4030009910	S.CER C1608 CH 1H 040B-T	T	54.8/104.4
C13	4030007090	S.CER C1608 CH 1H 470J-T	T	58.8/99.3
C14	4030007010	S.CER C1608 CH 1H 100D-T	T	58.8/98
C15	4030006860	S.CER C1608 JB 1H 102K-T	T	58.8/96.7
C16	4030006860	S.CER C1608 JB 1H 102K-T	T	51.3/96.2
C17	4030011770	S.CER C1608 CH 1H 060B-T	T	51.3/93.6
C18	4030006860	S.CER C1608 JB 1H 102K-T	T	55.2/91.9
C19	4030006850	S.CER C1608 JB 1H 471K-T	T	57/89.8
C21	4030007010	S.CER C1608 CH 1H 100D-T	T	55.2/86.7
C22	4030009550	S.CER C1608 CH 1H 2R5B-T	T	53.2/87.4
C23	4030006860	S.CER C1608 JB 1H 102K-T	T	48.4/79.5
C70	4030006860	S.CER C1608 JB 1H 102K-T	T	39.9/73.6
C72	4030007050	S.CER C1608 CH 1H 220J-T	T	42.5/73.6
C74	4030007090	S.CER C1608 CH 1H 470J-T	T	43/79.4
C75	4030009500	S.CER C1608 CH 1H 0R5B-T	T	45.5/79.5
C76	4030006860	S.CER C1608 JB 1H 102K-T	T	50.3/78
C77	4030007090	S.CER C1608 CH 1H 470J-T	T	50.3/76.7
C78	4030006860	S.CER C1608 JB 1H 102K-T	T	50.2/75.2
C79	4030009910	S.CER C1608 CH 1H 040B-T	T	49.6/72.9
C80	4030009510	S.CER C1608 CH 1H 010B-T	T	47.5/73.6
C81	4030009550	S.CER C1608 CH 1H 2R5B-T	T	41/68.8
C82	4030009910	S.CER C1608 CH 1H 040B-T	T	42.3/66.1

[MAIN-1 UNIT]

REF NO.	PARTS NO.	DESCRIPTION	M.	H/V LOCATION
C131	4030006860	S.CER C1608 JB 1H 102K-T	T	38.9/57.5
C132	4030010760	S.CER C1608 CH 1H 331J-T	T	44.3/54.8
C133	4030006860	S.CER C1608 JB 1H 102K-T	T	44.9/58.7
C134	4030011600	S.CER C1608 JB 1E 104K-T	T	44.7/57.4
C136	4030006860	S.CER C1608 JB 1H 102K-T	T	44.3/53.5
C137	4030006900	S.CER C1608 JB 1H 103K-T	T	44.3/52.2
C138	4030011600	S.CER C1608 JB 1E 104K-T	T	44.3/50.9
C140	4030006860	S.CER C1608 JB 1H 102K-T	T	38.5/55.5
C141	4030007050	S.CER C1608 CH 1H 220J-T	T	41.6/48.5
C191	4030011770	S.CER C1608 CH 1H 060B-T	T	46.9/48.9
C192	4030009540	S.CER C1608 CH 1H 1R5B-T	T	50.3/43.1
C195	4030011600	S.CER C1608 JB 1E 104K-T	T	46.9/34.4
C196	4030006900	S.CER C1608 JB 1H 103K-T	T	39.7/47.9
C197	4030006860	S.CER C1608 JB 1H 102K-T	T	48.2/34.4
C198	4030007120	S.CER C1608 CH 1H 820J-T	T	51.6/29.2
C199	4030006860	S.CER C1608 JB 1H 102K-T	T	47.3/26.4
C200	4550006250	S.TAN TEESVA 1A 106M8R	T	40.9/34.2
C201	4030006850	S.CER C1608 JB 1H 471K-T	T	52.9/31.8
C202	4030011600	S.CER C1608 JB 1E 104K-T	T	40.2/31.1
C203	4030011600	S.CER C1608 JB 1E 104K-T	T	40.2/29.8
C204	4030007160	S.CER C1608 CH 1H 181J-T	T	39.4/27.9
C205	4030007160	S.CER C1608 CH 1H 181J-T	T	40.2/26
C206	4030011600	S.CER C1608 JB 1E 104K-T	B	45/27.3
C207	4030011600	S.CER C1608 JB 1E 104K-T	T	63.2/39.8
C208	4030011600	S.CER C1608 JB 1E 104K-T	B	48.2/29.1
C209	4030006860	S.CER C1608 JB 1H 102K-T	T	45.6/25.1
C210	4030006860	S.CER C1608 JB 1H 102K-T	T	51.9/24.1
C211	4030011810	S.CER C1608 JB 1A 224K-T	T	57.7/38.8
C212	4030006880	S.CER C1608 JB 1H 472K-T	T	60.8/33.6
C213	4030011810	S.CER C1608 JB 1A 224K-T	T	62.7/31.2
C214	4030011600	S.CER C1608 JB 1E 104K-T	T	54.8/24
C215	4030011600	S.CER C1608 JB 1E 104K-T	T	51.9/21.3
C216	4030011600	S.CER C1608 JB 1E 104K-T	T	60.7/15.7
C217	4030011600	S.CER C1608 JB 1E 104K-T	T	61.2/24.2
C218	4030011600	S.CER C1608 JB 1E 104K-T	T	60.7/14.4
C219	4030011600	S.CER C1608 JB 1E 104K-T	T	53.3/15.7
C220	4030011810	S.CER C1608 JB 1A 224K-T	T	53.8/42.4
C271	4030011600	S.CER C1608 JB 1E 104K-T	T	85.9/34.5
C272	4550006250	S.TAN TEESVA 1A 106M8R	T	86.2/30
C273	4030006900	S.CER C1608 JB 1H 103K-T	T	84.6/34.5
C274	4030006900	S.CER C1608 JB 1H 103K-T	T	81.3/36.9
C275	4030006900	S.CER C1608 JB 1H 103K-T	T	80/36.8
C276	4030006900	S.CER C1608 JB 1H 103K-T	T	78.6/33.8
C277	4030006860	S.CER C1608 JB 1H 102K-T	T	83.9/38.7
C278	4030006900	S.CER C1608 JB 1H 103K-T	T	78.6/36.8
C281	4030006860	S.CER C1608 JB 1H 102K-T	T	81.8/28.5
C283	4030011600	S.CER C1608 JB 1E 104K-T	T	75.5/23.3
C286	4030011600	S.CER C1608 JB 1E 104K-T	B	75.8/43.9
C287	4030006900	S.CER C1608 JB 1H 103K-T	B	77.1/45.4
C288	4030006860	S.CER C1608 JB 1H 102K-T	B	78.9/40.5
C291	4030007140	S.CER C1608 CH 1H 121J-T	B	43.7/51.5
C293	4030011600	S.CER C1608 JB 1E 104K-T	B	44/54.6
C295	4030006900	S.CER C1608 JB 1H 103K-T	T	64.1/43
C296	4030011600	S.CER C1608 JB 1E 104K-T	T	66.1/39.7
C297	4030006900	S.CER C1608 JB 1H 103K-T	T	68.9/43.2
C341	4030006860	S.CER C1608 JB 1H 102K-T	T	91/25.5
C342	4030011600	S.CER C1608 JB 1E 104K-T	T	95.9/35.9
C343	4030011600	S.CER C1608 JB 1E 104K-T	T	108/31.4
C344	4030011810	S.CER C1608 JB 1A 224K-T	T	91/27.4
C345	4030007090	S.CER C1608 CH 1H 470J-T	T	98.9/34.3
C346	4030011600	S.CER C1608 JB 1E 104K-T	T	102.4/25.9
C347	4510008490	S.ELE EEE1CS100SR	T	104.8/28.8
C348	4030011600	S.CER C1608 JB 1E 104K-T	T	98.9/36.9
C349	4030011810	S.CER C1608 JB 1A 224K-T	T	91/30
C350	4030017490	S.CER C1608 JB 1A 105K-T	T	67.9/30.5
C390	4030007090	S.CER C1608 CH 1H 470J-T	T	35.7/51.3
C400	4030006900	S.CER C1608 JB 1H 103K-T	B	24.5/58.9
C402	4030007090	S.CER C1608 CH 1H 470J-T	B	23.2/69.5
C403	4030011810	S.CER C1608 JB 1A 224K-T	B	20.5/68.5
C404	4030007090	S.CER C1608 CH 1H 470J-T	B	24.9/70.6
C405	4030006860	S.CER C1608 JB 1H 102K-T	B	26.6/71.8
C406	4550000270	S.TAN TEESVA 1E 474M8R	B	15.8/74.8
C408	4030008880	S.CER C1608 JB 1H 223K-T	B	21.4/70.9
C409	4030008900	S.CER C1608 JB 1H 333K-T	B	19.9/76.1
C410	4030007090	S.CER C1608 CH 1H 470J-T	B	17.3/77.5
C411	4030017490	S.CER C1608 JB 1A 105K-T	T	22/61.6
C412	4030007090	S.CER C1608 CH 1H 470J-T	T	14.5/58.5
C414	4030007090	S.CER C1608 CH 1H 470J-T	B	26.5/57.8
C416	4030007010	S.CER C1608 CH 1H 100D-T	T	12.6/59.6
C417	4030011600	S.CER C1608 JB 1E 104K-T	T	12.6/60.9
C418	4030006880	S.CER C1608 JB 1H 472K-T	T	24.9/55.2
C419	4030017490	S.CER C1608 JB 1A 105K-T	T	14/50.4
C420	4030006880	S.CER C1608 JB 1H 472K-T	B	19.4/60.5
C421	4030007010	S.CER C1608 CH 1H 100D-T	T	19.7/55
C422	4030006880	S.CER C1608 JB 1H 472K-T	T	20.4/53
C423	4030007010	S.CER C1608 CH 1H 100D-T	T	19.5/49.7
C424	4030007090	S.CER C1608 CH 1H 470J-T	B	29.8/69.9
C425	4030007090	S.CER C1608 CH 1H 470J-T	B	33.6/62.6
C426	4030007090	S.CER C1608 CH 1H 470J-T	B	27.1/60.4
C427	4030007090	S.CER C1608 CH 1H 470J-T	B	31/62.6
C429	4030007090	S.CER C1608 CH 1H 470J-T	B	16.5/67.6
C430	4030007090	S.CER C1608 CH 1H 470J-T	T	20.1/61.5
C431	4030007090	S.CER C1608 CH 1H 470J-T	B	20.9/59.1
C432	4030007090	S.CER C1608 CH 1H 470J-T	T	26.2/56.8
C433	4030006850	S.CER C1608 JB 1H 471K-T	B	31.8/56
C435	4030007090	S.CER C1608 CH 1H 470J-T	T	27.5/57.7
C436	4030007090	S.CER C1608 CH 1H 470J-T	T	23.5/67.4
C437	4030007090	S.CER C1608 CH 1H 470J-T	B	26.7/69.2
C440	4030006900	S.CER C1608 JB 1H 103K-T	T	18.2/57.6
C467	4030007090	S.CER C1608 CH 1H 470J-T	B	13.6/77.5
C468	4030007090	S.CER C1608 CH 1H 470J-T	B	11/82
C469	4030007090	S.CER C1608 CH 1H 470J-T	B	12.9/80.3
C470	4030006850	S.CER C1608 JB 1H 471K-T	T	17.2/73.7
C471	4550006760	S.TAN TEESVB21A336M8R	T	16.6/78.5

M.=Mounted side (T: Mounted on the Top side, B: Mounted on the Bottom side)
S.=Surface mount

[MAIN-1 UNIT]

REF NO.	PARTS NO.	DESCRIPTION	M.	H/V LOCATION
C472	4030017490	S.CER C1608 JB 1A 105K-T	T	14.8/65.6
C473	4030006850	S.CER C1608 JB 1H 471K-T	T	14.8/66.9
C474	4030011600	S.CER C1608 JB 1E 104K-T	T	18.5/66.4
C475	4030006860	S.CER C1608 JB 1H 102K-T	T	17.2/66.4
C476	4030007090	S.CER C1608 CH 1H 470J-T	T	17.1/70.6
C478	4030009570	S.CER C1608 CH 1H 0R3B-T	T	28.6/76.7
C479	4030009920	S.CER C1608 CH 1H 050B-T	T	27.3/79.3
C480	4030006860	S.CER C1608 JB 1H 102K-T	T	22.7/80.9
C481	4030009530	S.CER C1608 CH 1H 030B-T	T	23.8/75
C482	4030009910	S.CER C1608 CH 1H 040B-T	T	21.2/74
C483	4030006860	S.CER C1608 JB 1H 102K-T	T	21.2/71.4
C484	4030009510	S.CER C1608 CH 1H 010B-T	T	27.5/71.4
C485	4030007090	S.CER C1608 CH 1H 470J-T	T	30.1/70.1
C486	4030007010	S.CER C1608 CH 1H 100D-T	T	30.1/71.3
C488	4030009540	S.CER C1608 CH 1H 1R5B-T	T	35.4/68.1
C489	4030009510	S.CER C1608 CH 1H 010B-T	T	33.5/67.6
C490	4030009530	S.CER C1608 CH 1H 030B-T	T	35.4/69.4
C491	4030009500	S.CER C1608 CH 1H 0R5B-T	T	33.5/70.2
C492	4030009520	S.CER C1608 CH 1H 020B-T	T	34.3/72.1
C493	4030009920	S.CER C1608 CH 1H 050B-T	T	32.2/72.8
C494	4030007020	S.CER C1608 CH 1H 120J-T	T	34.1/74.7
C495	4030009520	S.CER C1608 CH 1H 020B-T	T	32.2/75.4
C496	4030007070	S.CER C1608 CH 1H 330J-T	T	34.1/76
C497	4030009530	S.CER C1608 CH 1H 030B-T	T	33.7/78.6
C498	4030006850	S.CER C1608 JB 1H 471K-T	B	29.9/76
C500	4030006990	S.CER C1608 CH 1H 080D-T	T	29.4/73.1
C501	4030009910	S.CER C1608 CH 1H 040B-T	B	25.6/73.4
C503	4550006250	S.TAN TEESVA 1A 106M8R	T	18.8/70.3
C504	4030009560	S.CER C1608 CH 1H R75B-T	T	28.6/79.3
C550	4030006860	S.CER C1608 JB 1H 102K-T	B	19/32.2
C551	4030007030	S.CER C1608 CH 1H 150J-T	B	19.2/38.9
C552	4030006860	S.CER C1608 JB 1H 102K-T	B	21.1/38.9
C553	4030007030	S.CER C1608 CH 1H 150J-T	B	17.4/29.6
C554	4030007090	S.CER C1608 CH 1H 470J-T	B	18.2/35.7
C555	4030011600	S.CER C1608 JB 1E 104K-T	B	13.2/40.3
C556	4030007090	S.CER C1608 CH 1H 470J-T	B	26.7/40.2
C558	4030007090	S.CER C1608 CH 1H 470J-T	B	13.2/41.6
C559	4030011600	S.CER C1608 JB 1E 104K-T	B	23.4/42.6
C561	4030007090	S.CER C1608 CH 1H 470J-T	B	27/20.5
C562	4030007090	S.CER C1608 CH 1H 470J-T	B	12.7/27.5
C564	4550000270	S.TAN TEESVA 1E 474M8R	B	5/39.2
C567	4550000520	S.TAN TEESVA 1V 683M8R	B	17.5/40.4
C569	4030006860	S.CER C1608 JB 1H 102K-T	B	17.1/44.8
C570	4030007090	S.CER C1608 CH 1H 470J-T	B	24.7/43.4
C571	4550000530	S.TAN TEESVA 1V 104M8R	B	6.9/34.3
C574	4550003080	S.TAN TEESVA 1A 335M8R	T	5.7/37.8
C575	4030006880	S.CER C1608 JB 1H 472K-T	T	18.2/49.7
C576	4030007010	S.CER C1608 CH 1H 100D-T	T	22.6/50.4
C577	4030006900	S.CER C1608 JB 1H 103K-T	T	27.9/48.5
C578	4030007040	S.CER C1608 CH 1H 180J-T	T	30.5/48.5
C579	4030009520	S.CER C1608 CH 1H 020B-T	T	31.3/50.4
C580	4030007040	S.CER C1608 CH 1H 180J-T	T	31.8/48.5
C581	4030007010	S.CER C1608 CH 1H 100D-T	T	36.3/49
C582	4030007090	S.CER C1608 CH 1H 470J-T	B	7.1/30.3
C583	4030007090	S.CER C1608 CH 1H 470J-T	B	8.4/30.3
C584	4030007090	S.CER C1608 CH 1H 470J-T	B	4.3/28.2
C585	4030007090	S.CER C1608 CH 1H 470J-T	B	25.5/20.5
C586	4030007090	S.CER C1608 CH 1H 470J-T	B	28.3/51.4
C587	4030007090	S.CER C1608 CH 1H 470J-T	B	26.8/44.1
C588	4030007090	S.CER C1608 CH 1H 470J-T	B	26.4/38.9
C630	4030011810	S.CER C1608 JB 1A 224K-T	T	13.7/30.2
C631	4030009570	S.CER C1608 CH 1H 0R3B-T	T	17.8/34
C632	4030007030	S.CER C1608 CH 1H 150J-T	T	15.9/34.8
C634	4030006860	S.CER C1608 JB 1H 102K-T	T	12.8/37.8
C635	4030006860	S.CER C1608 JB 1H 102K-T	T	15/31.3
C637	4030011600	S.CER C1608 JB 1E 104K-T	B	20.6/20.5
C638	4030006860	S.CER C1608 JB 1H 102K-T	T	20.3/34.7
C639	4030007050	S.CER C1608 CH 1H 220J-T	T	21.7/31.5
C640	4030007050	S.CER C1608 CH 1H 220J-T	T	23.8/30.9
C641	4030009500	S.CER C1608 CH 1H 0R5B-T	T	23.9/29.6
C642	4550006250	S.TAN TEESVA 1A 106M8R	T	22.9/39.2
C643	4030011600	S.CER C1608 JB 1E 104K-T	T	20.6/37.6
C644	4030006860	S.CER C1608 JB 1H 102K-T	T	20.6/38.9
C645	4030007010	S.CER C1608 CH 1H 100D-T	T	26.7/32.2
C646	4030011600	S.CER C1608 JB 1E 104K-T	T	30.9/30.2
C647	4030006860	S.CER C1608 JB 1H 102K-T	T	25.8/30.2
C648	4030007090	S.CER C1608 CH 1H 470J-T	T	28.6/33
C649	4030007090	S.CER C1608 CH 1H 470J-T	T	28.6/35.6
C650	4030007090	S.CER C1608 CH 1H 470J-T	B	27.9/33.1
C651	4030007050	S.CER C1608 CH 1H 220J-T	B	23/28.8
C652	4030006860	S.CER C1608 JB 1H 102K-T	B	26.3/27.6
C653	4030007020	S.CER C1608 CH 1H 120J-T	B	20.6/28
C654	4030007020	S.CER C1608 CH 1H 120J-T	B	19/29.6
C655	4030017490	S.CER C1608 JB 1A 105K-T	T	32/32.5
C656	4030006850	S.CER C1608 JB 1H 471K-T	T	33.9/35.5
C657	4550006770	S.TAN TEESVD2 1C 476M-12R	T	31.8/40.6
C658	4030007090	S.CER C1608 CH 1H 470J-T	T	33.9/34.2
C659	4030009530	S.CER C1608 CH 1H 030B-T	B	21.4/32
C660	4030006860	S.CER C1608 JB 1H 102K-T	T	19.4/30.1
C661	4030007090	S.CER C1608 CH 1H 470J-T	T	3.5/23.2
C662	4550006250	S.TAN TEESVA 1A 106M8R	T	5.7/26.7
C710	4030006850	S.CER C1608 JB 1H 471K-T	T	35.6/61
C711	4030007090	S.CER C1608 CH 1H 470J-T	T	38.2/66.6
C712	4030006850	S.CER C1608 JB 1H 471K-T	T	38.4/79.6
C713	4030009520	S.CER C1608 CH 1H 020B-T	B	38.6/68.2
C714	4030009510	S.CER C1608 CH 1H 010B-T	B	35.5/68.7
C715	4030009520	S.CER C1608 CH 1H 020B-T	B	38.6/69.5
C716	4030011770	S.CER C1608 CH 1H 060B-T	B	36.2/71.4
C718	4030007090	S.CER C1608 CH 1H 470J-T	B	34/75.9
C719	4030007030	S.CER C1608 CH 1H 150J-T	B	38.7/76.5
C720	4030006860	S.CER C1608 JB 1H 102K-T	B	37.6/78.1
C721	4030007090	S.CER C1608 CH 1H 470J-T	T	32.5/55.7
C722	4030007090	S.CER C1608 CH 1H 470J-T	B	38.4/64.3
C723	4030007090	S.CER C1608 CH 1H 470J-T	B	38.3/82.1

[MAIN-1 UNIT]

REF NO.	PARTS NO.	DESCRIPTION	M.	H/V LOCATION
C770	4030011770	S.CER C1608 CH 1H 060B-T	B	32.3/37.3
C772	4030006860	S.CER C1608 JB 1H 102K-T	B	32.6/33.2
C773	4030006860	S.CER C1608 JB 1H 102K-T	B	34.4/48.8
C774	4030007020	S.CER C1608 CH 1H 120J-T	B	31.8/53.9
C775	4030009530	S.CER C1608 CH 1H 030B-T	B	31/52
C776	4030007020	S.CER C1608 CH 1H 120J-T	B	28.2/50.1
C777	4030006860	S.CER C1608 JB 1H 102K-T	B	29/47.5
C778	4030007090	S.CER C1608 CH 1H 470J-T	T	28.6/41.2
C779	4030006850	S.CER C1608 JB 1H 471K-T	T	24.6/41.5
C780	4030007090	S.CER C1608 CH 1H 470J-T	B	35.7/51.5
C830	4550006080	S.TAN TEESVB2 1C 106M8R	T	34.6/7.4
C831	4030011600	S.CER C1608 JB 1E 104K-T	B	35.7/8.5
C832	4030011600	S.CER C1608 JB 1E 104K-T	T	36.9/2.5
C833	4550006250	S.TAN TEESVA 1A 106M8R	T	32.4/2.5
C834	4030007090	S.CER C1608 CH 1H 470J-T	B	61/37.5
C835	4030011600	S.CER C1608 JB 1E 104K-T	B	53.2/30.5
C836	4550006250	S.TAN TEESVA 1A 106M8R	B	54.9/31.3
C837	4030007160	S.CER C1608 CH 1H 181J-T	B	56.6/37.5
C838	4030007160	S.CER C1608 CH 1H 181J-T	B	58.4/29.8
C839	4030007090	S.CER C1608 CH 1H 470J-T	B	60.1/32.2
C840	4030011600	S.CER C1608 JB 1E 104K-T	B	44.3/37.8
C841	4030007030	S.CER C1608 CH 1H 150J-T	B	48.9/35.9
C880	4030009920	S.CER C1608 CH 1H 050B-T	T	52.5/47
C881	4030009510	S.CER C1608 CH 1H 010B-T	T	50.6/47.8
C882	4030009510	S.CER C1608 CH 1H 010B-T	T	47.5/53.6
C883	4030009910	S.CER C1608 CH 1H 040B-T	T	47.5/56.2
C887	4030007090	S.CER C1608 CH 1H 470J-T	T	31.7/11.4
C888	4030007090	S.CER C1608 CH 1H 470J-T	T	29.1/11.4
C890	4030007090	S.CER C1608 CH 1H 470J-T	T	30.4/11.4
C893	4030007030	S.CER C1608 CH 1H 150J-T	B	47.7/37
C894	4030007030	S.CER C1608 CH 1H 150J-T	B	52.2/37.1
C895	4030007030	S.CER C1608 CH 1H 150J-T	B	54/37.9
C896	4030007020	S.CER C1608 CH 1H 120J-T	B	46.2/41.9
C897	4030009530	S.CER C1608 CH 1H 030B-T	B	40.9/46.3
C898	4030007020	S.CER C1608 CH 1H 120J-T	B	40.1/48.2
C899	4030006850	S.CER C1608 JB 1H 471K-T	B	35/41.3
C900	4030007090	S.CER C1608 CH 1H 470J-T	B	37.5/41.4
C901	4030006860	S.CER C1608 JB 1H 102K-T	B	56/41.8
C902	4030007090	S.CER C1608 CH 1H 470J-T	B	48.3/44.4
C904	4030007020	S.CER C1608 CH 1H 120J-T	T	50.7/58
C905	4030009530	S.CER C1608 CH 1H 030B-T	T	48.8/58.8
C906	4030007050	S.CER C1608 CH 1H 220J-T	T	50.7/60.6
C907	4030009510	S.CER C1608 CH 1H 010B-T	T	48.8/61.4
C908	4030007030	S.CER C1608 CH 1H 150J-T	T	50.7/62.2
C909	4030011600	S.CER C1608 JB 1E 104K-T	B	49.6/44.4
C910	4030011600	S.CER C1608 JB 1E 104K-T	B	62.8/33.9
C912	4030009910	S.CER C1608 CH 1H 040B-T	B	38.8/38.6
C913	4030007010	S.CER C1608 CH 1H 100D-T	B	33.1/39.4
C961	4030006850	S.CER C1608 JB 1H 471K-T	B	43.3/59.9
C962	4030009520	S.CER C1608 CH 1H 020B-T	B	52.3/58.6
C963	4030006980	S.CER C1608 CH 1H 070D-T	B	49/59.4
C965	4030006850	S.CER C1608 JB 1H 471K-T	B	49.4/62.6
C969	4030006860	S.CER C1608 JB 1H 102K-T	B	56.8/59.2
C970	4030007090	S.CER C1608 CH 1H 470J-T	B	54.7/59.9
C972	4030009510	S.CER C1608 CH 1H 010B-T	B	58.1/62.7
C974	4030006860	S.CER C1608 JB 1H 102K-T	B	53.9/64.6
C977	4030009560	S.CER C1608 CH 1H R75B-T	B	56.5/64.6
C978	4030006850	S.CER C1608 JB 1H 471K-T	B	53.7/66.5
C1022	4030006850	S.CER C1608 JB 1H 471K-T	T	65.5/58
C1023	4030006880	S.CER C1608 JB 1H 472K-T	T	69.6/56.2
C1024	4030006860	S.CER C1608 JB 1H 102K-T	T	69.6/58.6
C1025	4030007090	S.CER C1608 CH 1H 470J-T	T	69.6/57.4
C1026	4030006850	S.CER C1608 JB 1H 471K-T	T	72.8/51.2
C1029	4030011770	S.CER C1608 CH 1H 060B-T	B	92.2/43.1
C1030	4030009920	S.CER C1608 CH 1H 050B-T	B	97/43.1
C1031	4030009530	S.CER C1608 CH 1H 030B-T	B	93/41
C1081	4030007090	S.CER C1608 CH 1H 470J-T	B	97/44.7
C1082	4030007130	S.CER C1608 CH 1H 101J-T	B	97/46.3
C1083	4030007010	S.CER C1608 CH 1H 100D-T	B	96.2/49.9
C1088	4030006860	S.CER C1608 JB 1H 102K-T	T	98.7/51.8
C1090	4030006860	S.CER C1608 JB 1H 102K-T	B	82.8/65.7
C1091	4550003220	S.TAN TEESVA 1E 105M8R	B	84/69.9
C1092	4030006850	S.CER C1608 JB 1H 471K-T	B	66.9/68.4
C1094	4030009520	S.CER C1608 CH 1H 020B-T	B	101.9/38
C1095	4030009910	S.CER C1608 CH 1H 040B-T	B	102.7/39.9
C1096	4030006970	S.CER C1608 CH 1H 060D-T	B	105.1/39.2
C1098	4030009920	S.CER C1608 CH 1H 050B-T	B	107.7/41.9
C1099	4030007130	S.CER C1608 CH 1H 101J-T	T	104.6/45.3
C1100	4030007010	S.CER C1608 CH 1H 100D-T	B	106.5/46.1
C1101	4030007090	S.CER C1608 CH 1H 470J-T	B	105.1/46.1
C1102	4030006900	S.CER C1608 JB 1H 103K-T	T	96.6/49.6
C1105	4030007010	S.CER C1608 CH 1H 100D-T	T	112.1/48.9
C1106	4030007090	S.CER C1608 CH 1H 470J-T	T	110.8/48.9
C1107	4030007130	S.CER C1608 CH 1H 101J-T	T	109.5/48.9
C1108	4030009520	S.CER C1608 CH 1H 020B-T	B	112.1/37.6
C1110	4030011770	S.CER C1608 CH 1H 060B-T	B	110.1/42.7
C1113	4030007090	S.CER C1608 CH 1H 470J-T	B	100.6/47.4
C1114	4030007090	S.CER C1608 CH 1H 470J-T	T	79.9/60.6
C1115	4030011600	S.CER C1608 JB 1E 104K-T	T	79.9/61.9
C1116	4030006850	S.CER C1608 JB 1H 471K-T	B	101.9/47.4
C1118	4030007090	S.CER C1608 CH 1H 470J-T	B	79.2/109.5
C1120	4030011600	S.CER C1608 JB 1E 104K-T	T	95.3/49.6
C1121	4030007090	S.CER C1608 CH 1H 470J-T	T	78.6/121.7
C1123	4030007090	S.CER C1608 CH 1H 470J-T	T	82.8/114.9
C1161	4030006860	S.CER C1608 JB 1H 102K-T	B	112.9/41.6
C1162	4030009520	S.CER C1608 CH 1H 020B-T	B	115.7/41.6
C1167	4030006850	S.CER C1608 JB 1H 471K-T	T	113.2/65.9
C1168	4030007090	S.CER C1608 CH 1H 470J-T	T	113.2/67.2
C1172	4030007090	S.CER C1608 CH 1H 470J-T	T	120.8/87.7
C1173	4030006850	S.CER C1608 JB 1H 471K-T	T	122.1/87.7
C1174	4030006860	S.CER C1608 JB 1H 102K-T	T	119.4/87.7
C1176	4510008500	S.ELE EEE1CA101WP	T	93.7/91.8
C1186	4030006860	S.CER C1608 JB 1H 102K-T	T	109.1/91.9
C1187	4030007090	S.CER C1608 CH 1H 470J-T	T	110.4/91.9

M.=Mounted side (T: Mounted on the Top side, B: Mounted on the Bottom side)
S.=Surface mount

[MAIN-1 UNIT]

REF NO.	PARTS NO.	DESCRIPTION	M.	H/V LOCATION
C1188	4030006850	S.CER C1608 JB 1H 471K-T	T	111.7/91.9
C1189	4030009510	S.CER C1608 CH 1H 010B-T		77.8/107.8
C1191	4030007090	S.CER C1608 CH 1H 470J-T	T	86.8/121.8
C1192	4030007090	S.CER C1608 CH 1H 470J-T	B	91.2/125.9
C1193	4030006850	S.CER C1608 JB 1H 471K-T	B	86.4/119.3
C1196	4030006860	S.CER C1608 JB 1H 102K-T	T	97.3/107.6
C1197	4030000810	S.CER GRM2164C1HR50CD01D (GRM40 CK)	T	104.8/112.3
C1198	4030011030	S.CER GRM31M4C2H1R5CY21L (GRM42-6 CK)	T	90.9/116.3
C1199	4030017200	S.CER GRM31BR32J102KY01L (GHM1030 R)	T	117.5/121.2
C1200	4030000810	S.CER GRM2164C1HR50CD01D (GRM40 CK)	B	120.8/124.4
C1201	4030006850	S.CER C1608 JB 1H 471K-T	T	111.1/120.2
C1204	4030011070	S.CER GRM31M2C2H5R0CY21L (GRM42-6 CH)	T	116.1/100.4
C1207	4030000810	S.CER GRM2164C1HR50CD01D (GRM40 CK)	B	114.2/124.4
C1250	4030007010	S.CER C1608 CH 1H 100D-T	T	69.1/121.2
C1251	4030007010	S.CER C1608 CH 1H 100D-T	B	68.5/125.1
C1252	4030006900	S.CER C1608 JB 1H 103K-T	B	73.5/122.8
C1253	4030006850	S.CER C1608 JB 1H 471K-T	B	75/116.4
C1255	4030006850	S.CER C1608 JB 1H 471K-T	B	62.7/127.1
C1256	4030012610	S.CER C2012 JB 1C 474K-T	B	72.8/128.7
C1259	4030007090	S.CER C1608 CH 1H 470J-T	B	50.4/126.8
C1260	4030006850	S.CER C1608 JB 1H 471K-T	T	45.8/112.2
C1261	4030007010	S.CER C1608 CH 1H 100D-T	B	77.9/127.5
C1262	4030007010	S.CER C1608 CH 1H 100D-T	B	86.8/127.5
C1263	4030011600	S.CER C1608 JB 1E 104K-T	B	76.2/124.4
C1264	4510008490	S.ELE EEE1CS100SR	T	73.5/121.8
C1265	4030006880	S.CER C1608 JB 1H 472K-T	B	83.2/124.3
C1267	4030011600	S.CER C1608 JB 1E 104K-T	B	79.3/113.5
C1268	4030006860	S.CER C1608 JB 1H 102K-T	B	83.2/120
C1269	4030007090	S.CER C1608 CH 1H 470J-T	B	81.3/120.7
C1329	4030007090	S.CER C1608 CH 1H 470J-T	B	67.7/109.5
C1330	4510004601	ELE 16 ME 1000 HC		
C1331	4030006860	S.CER C1608 JB 1H 102K-T	B	56.8/105.6
C1332	4030007090	S.CER C1608 CH 1H 470J-T	B	56.8/104.1
C1333	4510008520	S.ELE EEE1CA470SP	T	64.5/121.1
C1334	4030006860	S.CER C1608 JB 1H 102K-T	B	67.6/104.9
C1335	4510008520	S.ELE EEE1CA470SP	T	69.1/97.8
C1336	4030011600	S.CER C1608 JB 1E 104K-T	B	73.9/94.7
C1337	4030006860	S.CER C1608 JB 1H 102K-T	B	76.7/94.7
C1338	4510008500	S.ELE EEE1CA101WP	T	78.1/92.3
C1339	4030007090	S.CER C1608 CH 1H 470J-T	B	70.5/106.6
C1340	4510008520	S.ELE EEE1CA470SP	T	68.7/113.5
C1341	4030011600	S.CER C1608 JB 1E 104K-T	B	75.6/108.1
C1342	4030011600	S.CER C1608 JB 1E 104K-T	B	78.4/108.1
C1343	4510008500	S.ELE EEE1CA101WP	T	77/101.1
C1344	4030007090	S.CER C1608 CH 1H 470J-T	B	62.3/117.3
C1345	4030011600	S.CER C1608 JB 1E 104K-T	B	39.8/100.6
C1346	4030011600	S.CER C1608 JB 1E 104K-T	B	43.5/89.5
C1347	4030007010	S.CER C1608 CH 1H 100D-T	B	56.8/109.7
C1348	4550006760	S.TAN TEESVB21A336M8R	T	42.6/97.2
C1349	4510008490	S.ELE EEE1CS100SR	T	76.3/84.2
C1350	4030006850	S.CER C1608 JB 1H 471K-T	T	34/87.7
C1351	4030017490	S.CER C1608 JB 1A 105K-T	B	29.6/90.9
C1352	4030012610	S.CER C2012 JB 1C 474K-T	B	37.1/86
C1353	4030006860	S.CER C1608 JB 1H 102K-T	T	31.2/92.9
C1355	4030007090	S.CER C1608 CH 1H 470J-T	T	38.3/94.7
C1356	4030011600	S.CER C1608 JB 1E 104K-T	B	39.3/85
C1357	4030011600	S.CER C1608 JB 1E 104K-T	B	42.9/97.3
C1358	4030007090	S.CER C1608 CH 1H 470J-T	B	8.2/92.2
C1359	4030007090	S.CER C1608 CH 1H 470J-T	B	19.1/99.4
C1360	4030007090	S.CER C1608 CH 1H 470J-T	B	20.4/99.8
C1361	4030007090	S.CER C1608 CH 1H 470J-T	T	42.9/86.4
C1362	4030007090	S.CER C1608 CH 1H 470J-T	B	8.8/94.8
C1366	4030006860	S.CER C1608 JB 1H 102K-T	B	27.4/91.7
C1367	4030007090	S.CER C1608 CH 1H 470J-T	B	57.8/65.4
C1368	4030007090	S.CER C1608 CH 1H 470J-T	T	35.4/98.8
C1369	4030007090	S.CER C1608 CH 1H 470J-T	T	25/97.2
C1370	4030007090	S.CER C1608 CH 1H 470J-T	B	51.7/72.4
C1371	4030006860	S.CER C1608 JB 1H 102K-T	B	53.1/85.3
C1372	4030007090	S.CER C1608 CH 1H 470J-T	B	55.5/107.1
C1373	4030007090	S.CER C1608 CH 1H 470J-T	T	62.1/108.8
C1374	4030007090	S.CER C1608 CH 1H 470J-T	B	62.2/115.4
C1375	4030007090	S.CER C1608 CH 1H 470J-T	B	63.8/112.1
C1376	4030007090	S.CER C1608 CH 1H 470J-T	T	58.1/122.8
C1410	4510008490	S.ELE EEE1CS100SR	T	36.2/20
C1411	4030017490	S.CER C1608 JB 1A 105K-T	T	45.2/22.6
C1412	4030017490	S.CER C1608 JB 1A 105K-T	T	48.5/22.9
C1460	4030006900	S.CER C1608 JB 1H 103K-T	T	41.6/6.7
C1461	4030008870	S.CER C1608 JB 1H 183K-T	T	45.4/7.2
C1462	4030008770	S.CER C1608 JB 1H 562K-T	T	47.3/10.5
C1463	4030011810	S.CER C1608 JB 1A 224K-T	T	47.5/5.3
C1464	4030008910	S.CER C1608 JB 1H 393K-T	T	50.2/2.6
C1465	4510008490	S.ELE EEE1CS100SR	T	57.9/6.1
C1466	4030006900	S.CER C1608 JB 1H 103K-T	T	55.3/3.2
C1467	4030011280	S.CER C1608 CH 1H 271J-T	T	50.8/9.4
C1468	4030006900	S.CER C1608 JB 1H 103K-T	B	40.8/6.9
C1469	4030008860	S.CER C1608 JB 1H 153K-T	B	44/4.3
C1470	4030006880	S.CER C1608 JB 1H 472K-T	B	45.6/10.1
C1471	4030006870	S.CER C1608 JB 1H 222K-T	B	45.7/6.9
C1472	4030006880	S.CER C1608 JB 1H 472K-T	B	45.8/13.3
C1473	4030008470	S.CER C1608 JB 1H 272K-T	B	45.8/14.9
C1474	4030008470	S.CER C1608 JB 1H 272K-T	B	48.2/14.1
C1475	4030011600	S.CER C1608 JB 1E 104K-T	B	55.7/9.3
C1476	4030010020	S.CER C1608 JB 1H 122K-T	T	39.2/9.3
C1477	4030006860	S.CER C1608 JB 1H 102K-T	T	35.2/15.5
C1478	4030008470	S.CER C1608 JB 1H 272K-T	T	42.4/9.9
C1479	4030006850	S.CER C1608 JB 1H 471K-T	T	45/11.2
C1480	4030006900	S.CER C1608 JB 1H 103K-T	T	47.3/13.3
C1481	4030006900	S.CER C1608 JB 1H 103K-T	T	49.2/14.1

[MAIN-1 UNIT]

REF NO.	PARTS NO.	DESCRIPTION	M.	H/V LOCATION
C1482	4030006900	S.CER C1608 JB 1H 103K-T	T	47.3/15.9
C1483	4030011600	S.CER C1608 JB 1E 104K-T	B	58.2/10.9
C1484	4510008490	S.ELE EEE1CS100SR	T	59.3/11
C1485	4030011600	S.CER C1608 JB 1E 104K-T	T	5.7/72.4
C1486	4030011600	S.CER C1608 JB 1E 104K-T	T	5.8/78.1
C1487	4030007090	S.CER C1608 CH 1H 470J-T	T	4/20.2
C1488	4030006900	S.CER C1608 JB 1H 103K-T	T	6.1/81.5
C1500	4030007010	S.CER C1608 CH 1H 100D-T	T	118.4/12.8
C1501	4030007010	S.CER C1608 CH 1H 100D-T	B	117.6/10.8
C1502	4030007010	S.CER C1608 CH 1H 100D-T	B	115.2/4.1
C1503	4030007010	S.CER C1608 CH 1H 100D-T	B	117.6/13.2
C1504	4030007010	S.CER C1608 CH 1H 100D-T	B	111.1/4.1
C1505	4030007010	S.CER C1608 CH 1H 100D-T	B	108.3/10.2
C1506	4030007010	S.CER C1608 CH 1H 100D-T	T	105.3/9.5
C1507	4030007090	S.CER C1608 CH 1H 470J-T	B	30.2/23.5
C1509	4030007090	S.CER C1608 CH 1H 470J-T	T	17.3/23.4
C1510	4030007090	S.CER C1608 CH 1H 470J-T	B	50.6/107.2
C1511	4030007090	S.CER C1608 CH 1H 470J-T	B	80.6/5.7
C1512	4030007090	S.CER C1608 CH 1H 470J-T	B	79.5/4.1
C1514	4030007090	S.CER C1608 CH 1H 470J-T	B	81/7.9
C1515	4030007090	S.CER C1608 CH 1H 470J-T	B	83.7/6.8
C1516	4030007090	S.CER C1608 CH 1H 470J-T	T	88.3/10.2
C1517	4030007090	S.CER C1608 CH 1H 470J-T	B	89.5/6.9
C1518	4030007090	S.CER C1608 CH 1H 470J-T	B	91/6.9
C1519	4030007090	S.CER C1608 CH 1H 470J-T	T	93.2/9.3
C1520	4030007090	S.CER C1608 CH 1H 470J-T	B	97.7/12
C1521	4030007090	S.CER C1608 CH 1H 470J-T	T	93.4/2.3
C1522	4030007090	S.CER C1608 CH 1H 470J-T	T	92.1/1.9
C1523	4030007090	S.CER C1608 CH 1H 470J-T	B	91.7/4.1
C1524	4030007090	S.CER C1608 CH 1H 470J-T	T	89.4/2.3
C1525	4030007090	S.CER C1608 CH 1H 470J-T	B	84.4/3.4
C1526	4030007090	S.CER C1608 CH 1H 470J-T	T	83.2/1
C1527	4030007090	S.CER C1608 CH 1H 470J-T	T	65.5/6.3
C1529	4030007010	S.CER C1608 CH 1H 100D-T	T	103.5/9.7
C1548	4030007090	S.CER C1608 CH 1H 470J-T	T	6.5/88.1
C1549	4030007090	S.CER C1608 CH 1H 470J-T	B	1.7/53.2
C1550	4550006250	S.TAN TEESVA 1A 106M8R	T	4.8/50.2
C1551	4030007170	S.CER C1608 CH 1H 221J-T	B	7.6/55
C1552	4550006250	S.TAN TEESVA 1A 106M8R	T	5.3/59.1
C1553	4550007270	S.TAN F931A475MAABMA	B	4/55.8
C1554	4510008490	S.ELE EEE1CS100SR	T	4.8/54.1
C1555	4550006250	S.TAN TEESVA 1A 106M8R	T	9.4/61.7
C1556	4030011600	S.CER C1608 JB 1E 104K-T	B	12/62.9
C1557	4030017490	S.CER C1608 JB 1A 105K-T	B	7.4/75.3
C1558	4030008920	S.CER C1608 JB 1H 473K-T	B	7.1/66.9
C1559	4030017490	S.CER C1608 JB 1A 105K-T	B	7.7/63.9
C1560	4510008510	S.ELE EEE1CA471P	T	6.2/99.2
C1561	4030011600	S.CER C1608 JB 1E 104K-T	B	1.8/74.8
C1562	4510008510	S.ELE EEE1CA471P	T	21.6/105.6
C1563	4030007090	S.CER C1608 CH 1H 470J-T	B	7.4/72.2
C1564	4030007090	S.CER C1608 CH 1H 470J-T	B	1.8/76.4
C1565	4030007090	S.CER C1608 CH 1H 470J-T	B	19.6/57.2
C1566	4030007090	S.CER C1608 CH 1H 470J-T	B	3.3/98.5
C1567	4030007090	S.CER C1608 CH 1H 470J-T	B	4.6/62.8
C1568	4030007090	S.CER C1608 CH 1H 470J-T	T	8.2/52.1
C1569	4030007090	S.CER C1608 CH 1H 470J-T	B	14.4/121.7
C1571	4030007090	S.CER C1608 CH 1H 470J-T	T	13.9/101.5
C1572	4030006860	S.CER C1608 JB 1H 102K-T	T	7.9/55.5
C1600	4030007090	S.CER C1608 CH 1H 470J-T	T	4.4/21.6
C1601	4030007090	S.CER C1608 CH 1H 470J-T	B	3.3/20
C1602	4030007090	S.CER C1608 CH 1H 470J-T	T	20.9/15.5
C1603	4030007090	S.CER C1608 CH 1H 470J-T	T	22.4/15.5
C1604	4030007090	S.CER C1608 CH 1H 470J-T	B	39.7/2.2
C1605	4030007090	S.CER C1608 CH 1H 470J-T	B	67.2/1.7
C1607	4030011600	S.CER C1608 JB 1E 104K-T	B	110.1/23.6
C1608	4510008490	S.ELE EEE1CS100SR	T	108.6/27.3
C1609	4030006860	S.CER C1608 JB 1H 102K-T	T	102.1/19.8
C1610	4510008490	S.ELE EEE1CS100SR	T	102/22.4
C1611	4030006860	S.CER C1608 JB 1H 102K-T	T	111.1/15.8
C1612	4030006860	S.CER C1608 JB 1H 102K-T	B	110.2/12.1
C1613	4030006860	S.CER C1608 JB 1H 102K-T	B	103.5/12
C1614	4030006860	S.CER C1608 JB 1H 102K-T	T	110.3/13.6
C1615	4030006850	S.CER C1608 JB 1H 471K-T	T	111.9/20.3
C1617	4030007090	S.CER C1608 CH 1H 470J-T	T	99.2/11
C1619	4030006850	S.CER C1608 JB 1H 471K-T	T	108.7/22
C1620	4030006850	S.CER C1608 JB 1H 471K-T	B	104.2/22.8
C1621	4030006850	S.CER C1608 JB 1H 471K-T	B	14.2/1.7
C1622	4550006920	S.TAN TEESVB2 1E 335M-8R	B	106.2/15.6
C1623	4550006920	S.TAN TEESVB2 1E 335M-8R	B	116.7/24.1
C1624	4030007090	S.CER C1608 CH 1H 470J-T	T	28.9/16.6
C1625	4030007090	S.CER C1608 CH 1H 470J-T	T	30.2/16.6
C1626	4030007090	S.CER C1608 CH 1H 470J-T	T	31.5/16.6
C1669	4030007090	S.CER C1608 CH 1H 470J-T	T	93.2/11.9
C1670	4030017490	S.CER C1608 JB 1A 105K-T	T	102.1/18.2
C1672	4030011600	S.CER C1608 JB 1E 104K-T	T	95.6/16.2
C1673	4030006860	S.CER C1608 JB 1H 102K-T	T	95.7/18.9
C1674	4030011810	S.CER C1608 JB 1A 224K-T	T	88.9/16
C1675	4550006760	S.TAN TEESVB21A336M8R	T	92/20.5
C1676	4510008490	S.ELE EEE1CS100SR	T	88.4/19.7
C1677	4030008850	S.CER C1608 JB 1H 123K-T	B	83.6/15.4
C1678	4510008490	S.ELE EEE1CS100SR	T	84.6/20.2
C1679	4030007020	S.CER C1608 CH 1H 120J-T	B	80.4/15.4
C1680	4030017490	S.CER C1608 JB 1A 105K-T	B	86.2/21.5
C1681	4030009490	S.CER C1608 JB 1H 821K-T	B	86.2/27.3
C1682	4030008470	S.CER C1608 JB 1H 272K-T	B	79.4/26
C1683	4030007120	S.CER C1608 CH 1H 820J-T	B	83.4/25.8
C1684	4030008890	S.CER C1608 JB 1H 273K-T	B	87.7/10.6
C1685	4510008490	S.ELE EEE1CS100SR	T	80.8/19.7
C1686	4030011600	S.CER C1608 JB 1E 104K-T	B	88.9/21.5
C1687	4550006250	S.TAN TEESVA 1A 106M8R	B	72.6/14.2
C1688	4030011600	S.CER C1608 JB 1E 104K-T	T	81.6/13.1
C1689	4030011600	S.CER C1608 JB 1E 104K-T	T	77.1/12.5
C1690	4030011600	S.CER C1608 JB 1E 104K-T	T	73.7/9.3
C1691	4550006250	S.TAN TEESVA 1A 106M8R	T	76.7/17.2

M.=Mounted side (T: Mounted on the Top side, B: Mounted on the Bottom side)
S.=Surface mount

[MAIN-1 UNIT]

REF NO.	PARTS NO.	DESCRIPTION		M.	H/V LOCATION
C1692	4510008490	S.ELE	EEE1CS100SR	T	73.7/18.4
C1693	4550006250	S.TAN	TEESVA 1A 106M8R	T	69.3/3.9
C1694	4030011600	S.CER	C1608 JB 1E 104K-T	B	76.4/19.9
C1695	4030008890	S.CER	C1608 JB 1H 273K-T	B	89.8/3
C1696	4030011600	S.CER	C1608 JB 1E 104K-T	T	1.6/11.4
C1697	4030007090	S.CER	C1608 CH 1H 470J-T	T	40.2/2.5
C1698	4030007090	S.CER	C1608 CH 1H 470J-T	T	1.6/12.6
C1699	4030007090	S.CER	C1608 CH 1H 470J-T	T	25/1.7
C1700	4030007090	S.CER	C1608 CH 1H 470J-T	B	5.4/91.6
C1750	4030006900	S.CER	C1608 JB 1H 103K-T	T	26.8/12.2
C1751	4030006850	S.CER	C1608 JB 1H 471K-T	T	54.5/123.7
C1752	4030006900	S.CER	C1608 JB 1H 103K-T	T	28.6/119.3
C1753	4030006860	S.CER	C1608 JB 1H 102K-T	T	24.2/120.5
C1754	4510008520	S.ELE	EEE1CA470SP	T	31.8/127.5
C1755	4030007090	S.CER	C1608 CH 1H 470J-T	T	25.8/113.2
C1800	4030007090	S.CER	C1608 CH 1H 470J-T	B	24/20.5
C1801	4030006900	S.CER	C1608 JB 1H 103K-T	T	42/103.6
C1802	4030006900	S.CER	C1608 JB 1H 103K-T	T	42.5/112.2
C1803	4030006850	S.CER	C1608 JB 1H 471K-T	T	28.6/104.1
C1804	4030006850	S.CER	C1608 JB 1H 471K-T	T	32.4/103.3
C1805	4030006850	S.CER	C1608 JB 1H 471K-T	T	27.8/101.5
C1806	4030006850	S.CER	C1608 JB 1H 471K-T	T	32.4/99.7
C1807	4030006850	S.CER	C1608 JB 1H 471K-T	T	42/101.4
C1808	4030007090	S.CER	C1608 CH 1H 470J-T	T	38.8/112
J1550	6450001440	CON	HSJ1403-01-010		
J1600	6510016481	CON	52018-8846(8845)		
J1602	6510021970	S.CON	AXN330C130P	T	26.2/21.8
J1750	6510009351	CON	B2B-ZR(LF)(SN)		
J1800	6510021722	S.CON	30FLT-SM2-TB(LF)(SN)(M)	T	44/107.5
J1801	6510021722	S.CON	30FLT-SM2-TB(LF)(SN)(M)	T	87/5.8
W1164	7120000490	JUM	ERD25T0		
W1330	8900011960	CAB	OPC-1216		
EP5	6910000630	BEA	FSRH070140RN000B (FSOH070RN)		
EP6	6910000630	BEA	FSRH070140RN000B (FSOH070RN)		
EP401	6910012350	S.BEA	MMZ1608Y 102BT	B	16.5/70.2
EP403	6910012350	S.BEA	MMZ1608Y 102BT	B	20.8/63
EP404	6910012350	S.BEA	MMZ1608Y 102BT	T	14.4/60.4
EP405	6910012350	S.BEA	MMZ1608Y 102BT	T	21.3/66.3
EP470	6910012350	S.BEA	MMZ1608Y 102BT	T	16.4/68.3
EP482	6910012350	S.BEA	MMZ1608Y 102BT	B	12.9/82.8
EP550	6910012350	S.BEA	MMZ1608Y 102BT	B	24.6/39.8
EP551	6910012350	S.BEA	MMZ1608Y 102BT	B	35.1/26.6
EP552	6910012350	S.BEA	MMZ1608Y 102BT	B	27.1/48.7
EP553	6910012350	S.BEA	MMZ1608Y 102BT	B	18/48.1
EP721	6910012350	S.BEA	MMZ1608Y 102BT	B	32.1/85.5
EP1601	6910014690	S.BEA	MPZ1608S221A-T	T	114.3/16.5
EP1602	6910014690	S.BEA	MPZ1608S221A-T	T	105.1/18.2
EP1603	6910014690	S.BEA	MPZ1608S221A-T	T	104.4/14
EP1604	6910014690	S.BEA	MPZ1608S221A-T	T	109/12.4
EP1606	6910014690	S.BEA	MPZ1608S221A-T	B	114.3/12.3
EP1607	6910014690	S.BEA	MPZ1608S221A-T	T	113.4/13.9
EP1608	6910014690	S.BEA	MPZ1608S221A-T	T	102.7/11.8
EP1609	6910014690	S.BEA	MPZ1608S221A-T	B	107.4/8.6
EP1750	6910012350	S.BEA	MMZ1608Y 102BT	B	27.8/124
EP1751	6910012350	S.BEA	MMZ1608Y 102BT	B	27.8/125.5

M.=Mounted side (T: Mounted on the Top side, B: Mounted on the Bottom side)

S.=Surface mount

BOARD LAYOUTS

The combination of this side and the bottom side shows the board layout in the same configuration as the actual P.C.Board.

• LOGIC-1 UNIT (TOP VIEW)

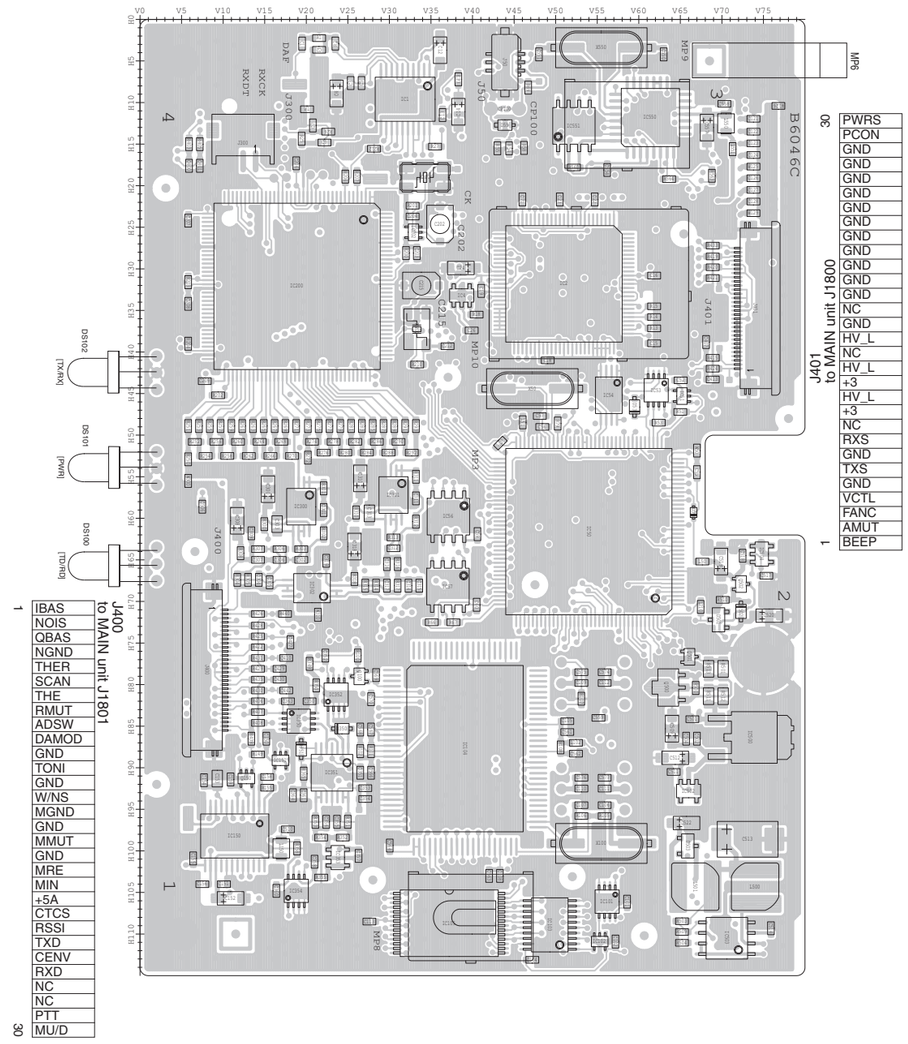

J400 to MAIN unit J1801

IBAS	NOIS
NOIS	QBAS
QBAS	NGND
NGND	THER
THER	SCAN
SCAN	THE
THE	RMUT
RMUT	ADSW
ADSW	DAMOD
DAMOD	GND
GND	TONI
TONI	GND
GND	W/NS
W/NS	MGND
MGND	GND
GND	MMUT
MMUT	GND
GND	MRE
MRE	MIN
MIN	+5A
+5A	CTCS
CTCS	RSSI
RSSI	TXD
TXD	CENV
CENV	RXD
RXD	NC
NC	NC
NC	PTT
PTT	MU/D

J401 to MAIN unit J1800

PWRS	PCON
PCON	GND
GND	GND
GND	GND
GND	GND
GND	GND
GND	GND
GND	GND
GND	GND
GND	GND
GND	GND
GND	GND
GND	GND
NC	GND
GND	HV_L
HV_L	NC
NC	HV_L
HV_L	+3
+3	HV_L
HV_L	+3
+3	NC
NC	RXS
RXS	GND
GND	TXS
TXS	GND
GND	VCTL
VCTL	FANC
FANC	AMUT
AMUT	BEEP

• MAIN-1 UNIT (TOP VIEW)

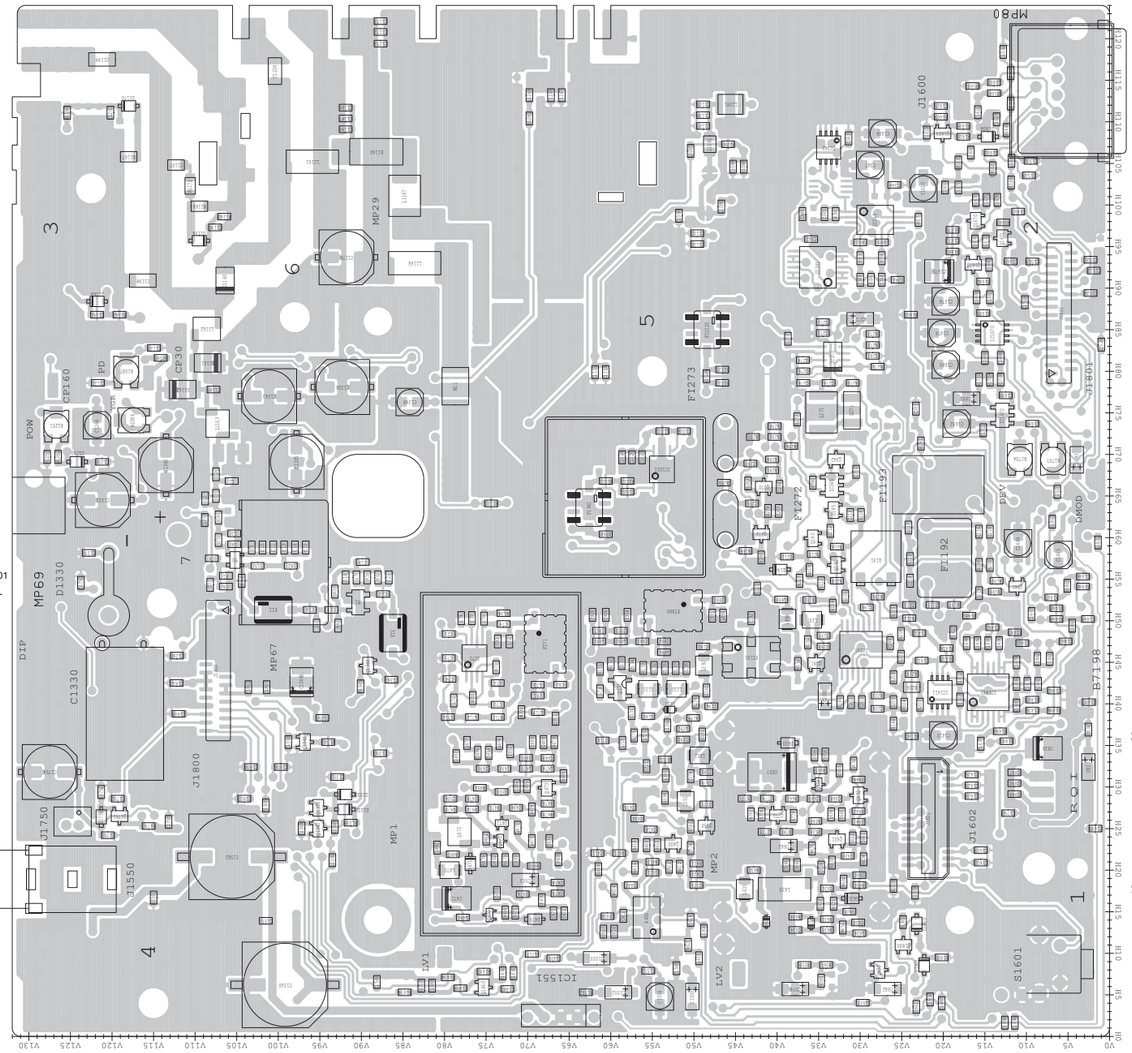

J1800 to LOGIC-1 unit J401

PCON	PWRS
GND	GND
GND	GND
GND	GND
GND	GND
GND	GND
NC	GND
HV_L	GND
HV_L	NC
HV_L	+3
NC	+3
GND	RXS
GND	TXS
FANC	VCTL
BEEP	AMUT

J1600 to MIC

RXD	8
GND	
MIC	
MICE	
PTT	
TXD	
MICU/D	
8V	1

J1801 to LOGIC-1 unit J400

PTT	MU/D
NC	NC
CENV	RXD
RSSI	TXD
+5A	CTCS
MRE	MIN
MMUT	GND
MGND	GND
GND	W/NS
GND	TONI
ADSW	DAMOD
THE	RMUT
THER	SCAN
QBAS	NGND
IBAS	NOIS

J1602 to LOGIC-1 unit J101

DAF	GND
TXSW	GND
GND	GND
GND	GND
GND	GND
GND	GND
GND	GND
P2ST	GND
P2RS	GND
PDAT	GND
PSCK	GND
GND	GND
GND	P1ST
UNLK	1FCN
SHIFT	POWRS

The combination of this side and the bottom side shows the board layout in the same configuration as the actual P.C.Board.

• **MAIN-1 UNIT**
(BOTTOM VIEW)

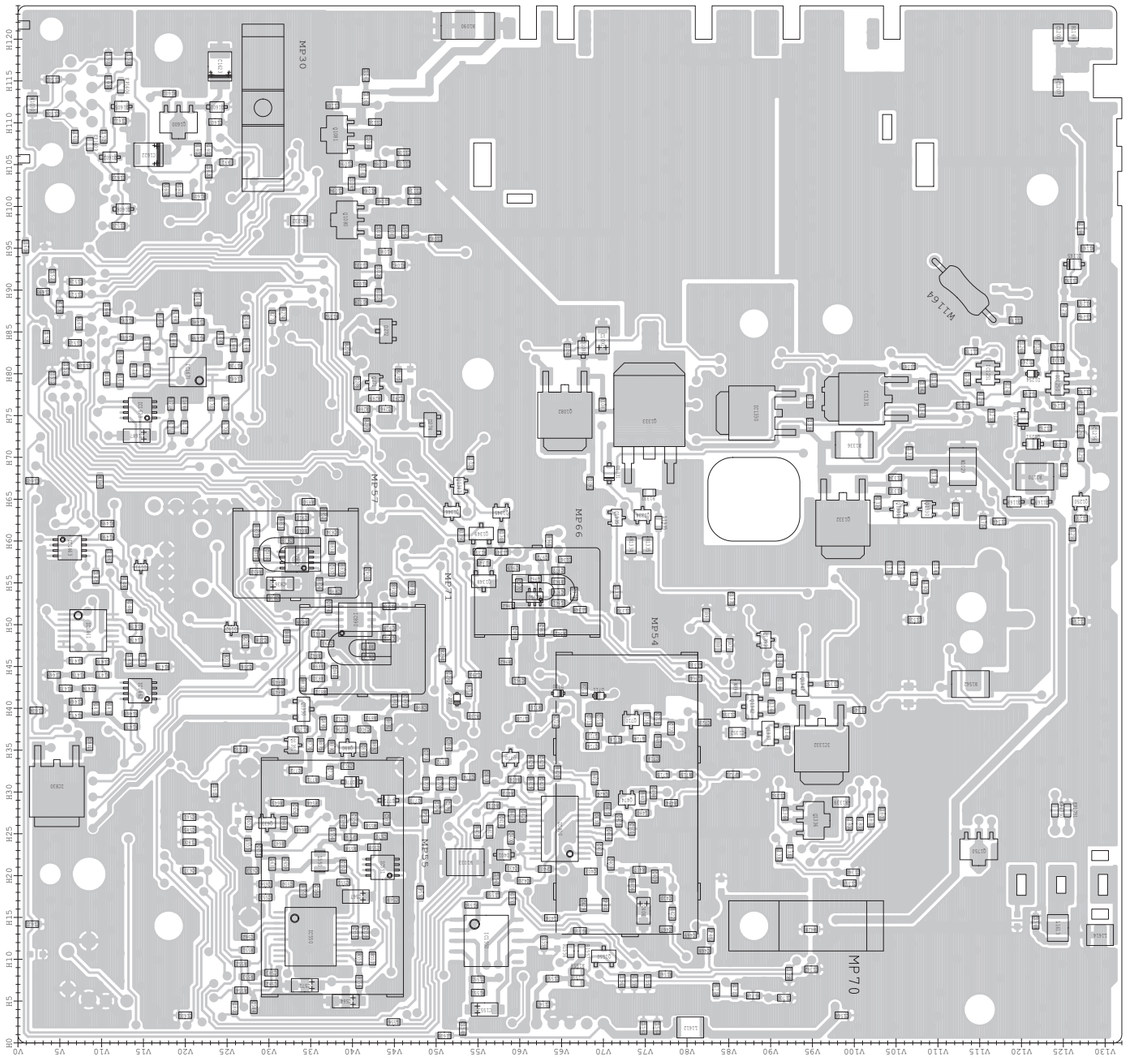

• **LOGIC-1 UNIT**
(BOTTOM VIEW)

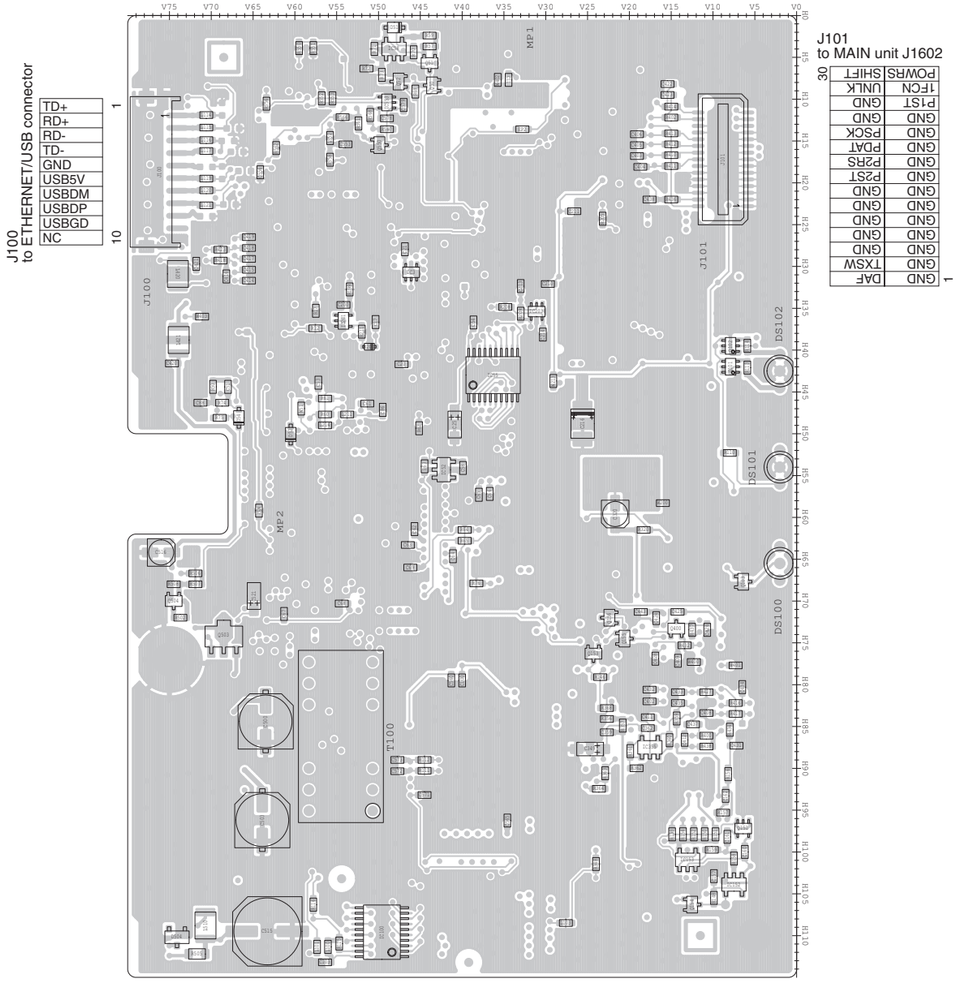

VOLTAGE DIAGRAM

LOGIC-1 UNIT(1)

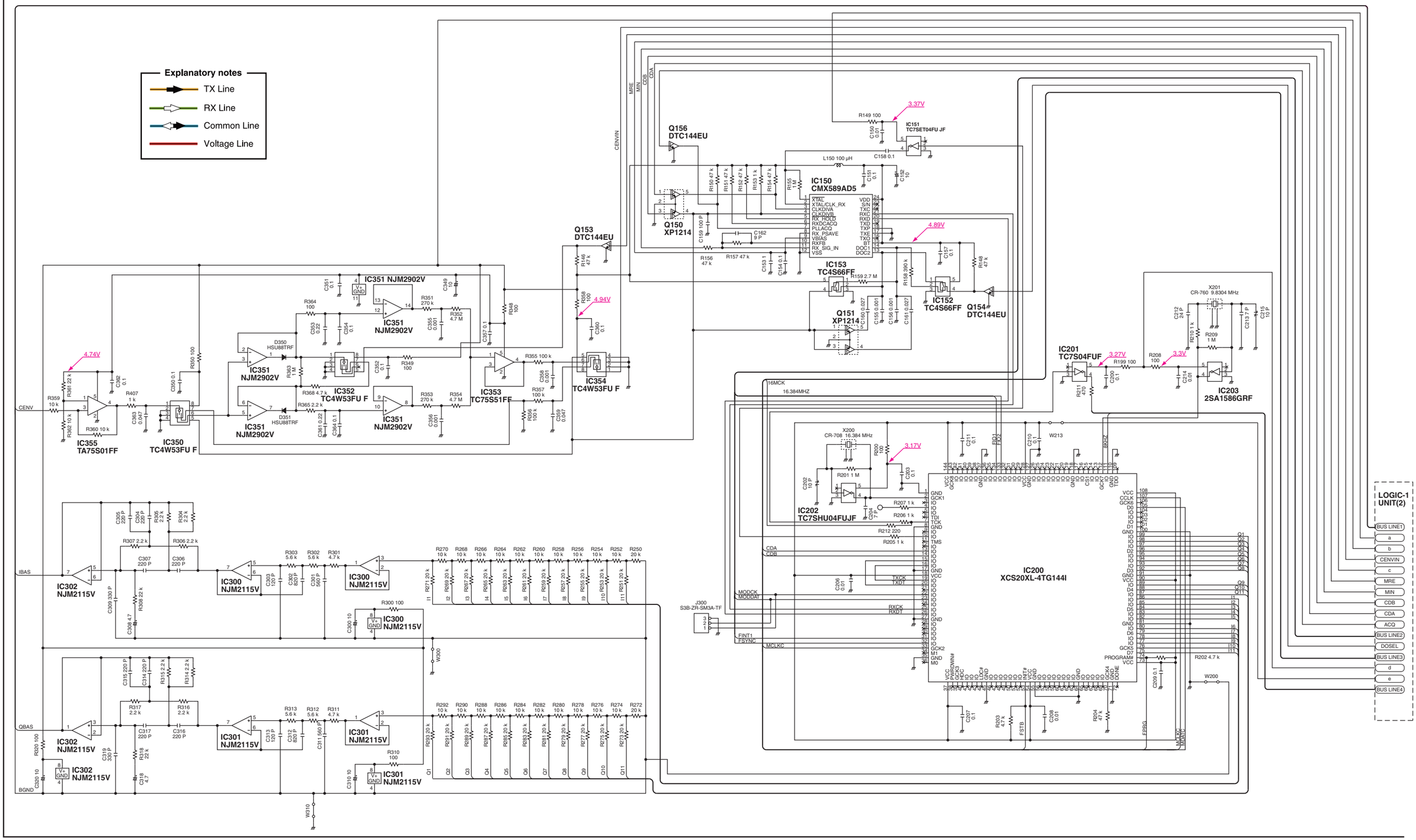

*; Refer to "PARTS LIST."

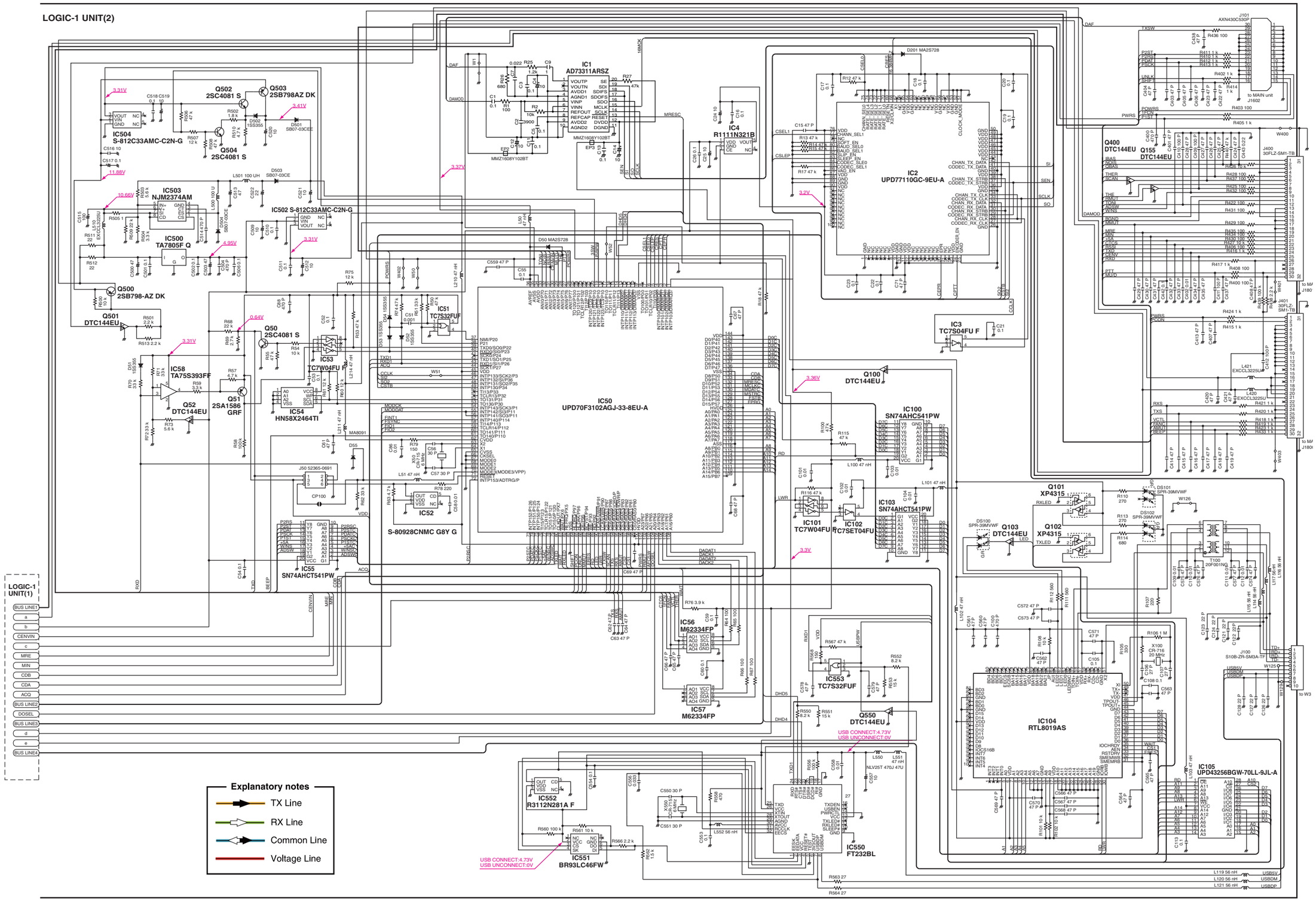

*; Refer to "PARTS LIST."

MAIN-1 UNIT (1)

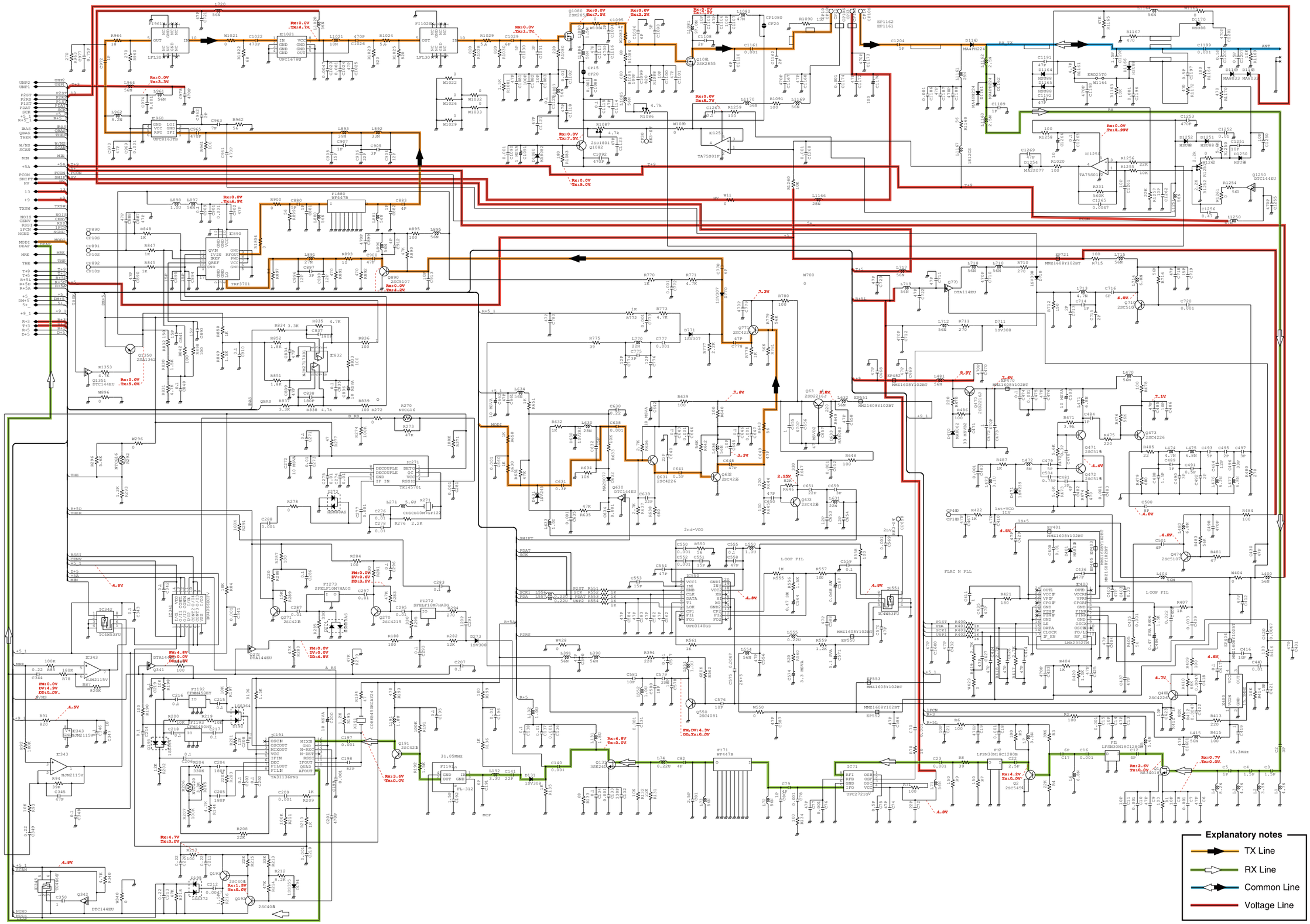

*; Refer to "PARTS LIST."

MAIN-1 UNIT (2)

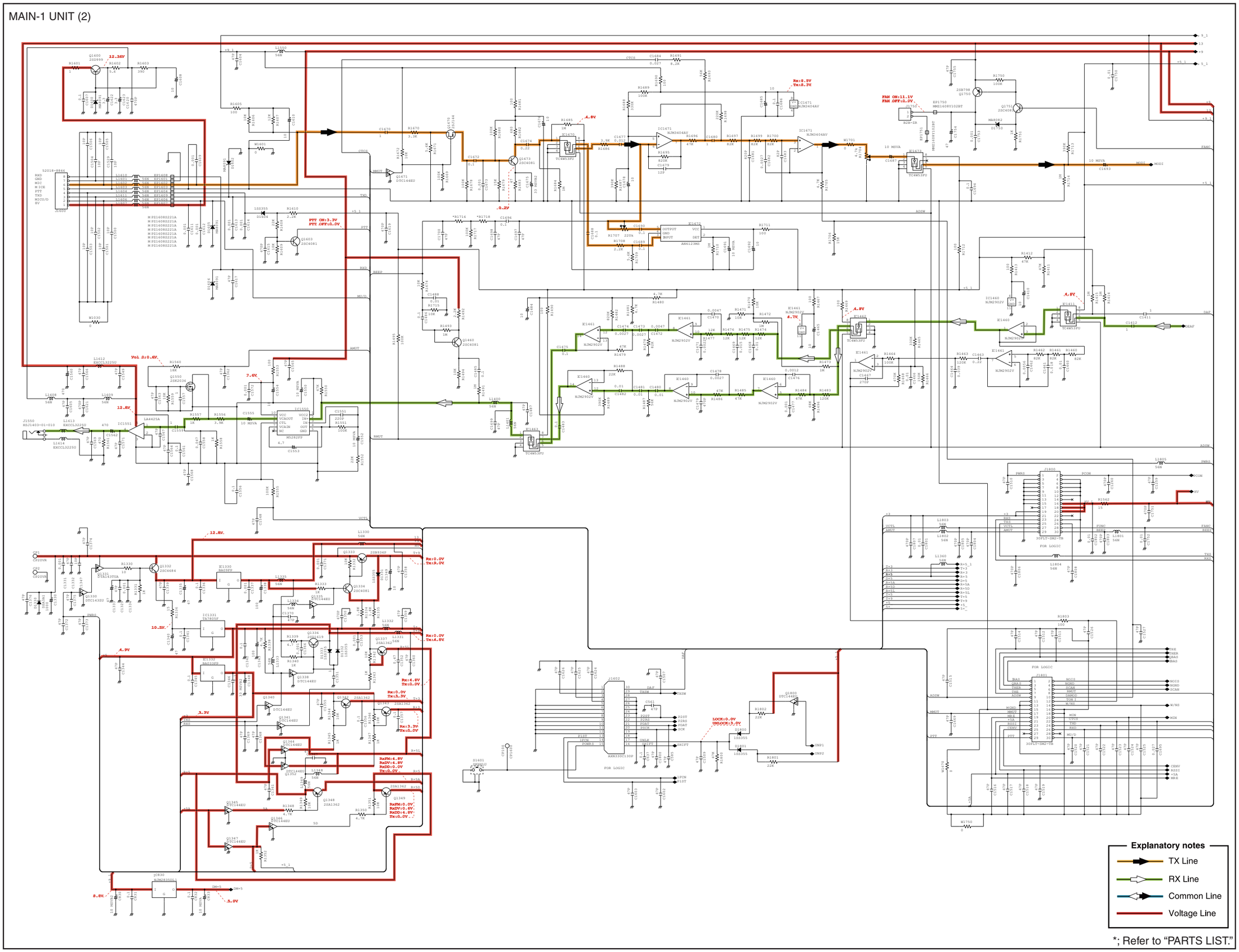

*; Refer to "PARTS LIST."

ICOM®

SERVICE MANUAL

DIGITAL TRANSCEIVER

ID–1

S-14120IZ-C1
May. 2005

Icom Inc.

INTRODUCTION

This service manual describes the latest service information for the **ID-1** DIGITAL TRANSCEIVER at the time of publication.

MODEL	VERSION	SYMBOL	RC-24
ID-1	U.S.A.	USA-2	Optional
		USA-3	Supplied
	Europe	EUR-2	Optional
		EUR-3	Supplied
	General	GEN-2	Optional
		GEN-3	Supplied

To upgrade quality, all electrical or mechanical parts and internal circuits are subject to change without notice or obligation.

DANGER

NEVER connect the transceiver to an AC outlet or to a DC power supply that uses more than 16 V. Such a connection could cause a fire or electric hazard.

DO NOT expose the transceiver to rain, snow or any liquids.

DO NOT reverse the polarities of the power supply when connecting the transceiver.

DO NOT apply an RF signal of more than 20 dBm (100 mW) to the antenna connector. This could damage the transceiver's front end.

ORDERING PARTS

Be sure to include the following four points when ordering replacement parts:

1. 10-digit order numbers
2. Component part number and name
3. Equipment model name and unit name
4. Quantity required

<**SAMPLE ORDER**>

2710000590	Fan	MF40D-12H-001	ID-1	Chassis	2 pieces
8900010940	Cable	OPC-1119	RC-24	Chassis	3 pieces

Addresses are provided on the inside back cover for your convenience.

REPAIR NOTES

1. Make sure a problem is internal before disassembling the transceiver.
2. **DO NOT** open the transceiver until the transceiver is disconnected from its power source.
3. **DO NOT** force any of the variable components. Turn them slowly and smoothly.
4. **DO NOT** short any circuits or electronic parts. An insulated turning tool **MUST** be used for all adjustments.
5. **DO NOT** keep power ON for a long time when the transceiver is defective.
6. **DO NOT** transmit power into a signal generator or a sweep generator.
7. **ALWAYS** connect a 30 dB to 40 dB attenuator between the transceiver and a deviation meter or spectrum analyzer when using such test equipment.
8. **READ** the instructions of test equipment thoroughly before connecting equipment to the transceiver.

Icom, Icom Inc. and ICOM logo are registered trademarks of Icom Incorporated (Japan) in the United States, the United Kingdom, Germany, France, Spain, Russia and/or other countries.

TABLE OF CONTENTS

SECTION 1 SPECIFICATIONS

SECTION 2 INSIDE VIEWS
2-1 ID-1 2-1

SECTION 3 DISASSEMBLY INSTRUCTIONS
3-1 ID-1 3-1
3-2 RC-24. 3-1

SECTION 4 CIRCUIT DESCRIPITON
4-1 RECEIVER CIRCUITS. 4-1
4-2 TRNSMITTER CIRCUITS 4-3
4-3 PLL CIRCUITS 4-5
4-4 POWER SUPPLY CIRCUITS. 4-6
4-5 PORT ALLOCATION 4-7

SECTION 5 ADJUSTMENT PROCEDURES
5-1 PREPARATION 5-1
5-2 PLL AND CODEC ADJUSTMENT. 5-3
5-3 TRANSMITTER ADJUSTMENT 5-6
5-4 RECEIVER ADJUSTMENT 5-7

SECTION 6 PARTS LIST

SECTION 7 SEMI-CONDUCTOR INFORMATION

SECTION 8 MECHANICAL PARTS AND DISASSEMBLY
8-1 ID-1 8-1
8-2 RC-24. 8-2

SECTION 9 BOARD LAYOUTS
9-1 MAIN UNIT 9-1
9-2 LOGIC-1 UNIT. 9-3
9-3 RC-24. 9-5

SECTION 10 BLOCK DIAGRAM
10-1 MAIN UNIT 10-1
10-2 LOGIC-1 UNIT. 10-2
10-3 RC-24. 10-2

SECTION 11 VOLTAGE DIAGRAM
11-1 MAIN UNIT 11-1
11-2 LOGIC-1 UNIT. 11-4
11-3 RC-24. 11-6

SECTION 1 SPECIFICATIONS

■ GENERAL

• Frequency coverage	: 1240.000–1300.000 MHz
• Type of emission	: FM, GMSK (Digital)
• Transmission speed (theoretical value)	: Data 128 kbps Digital voice 4.8 kbps
• Codec	: AMBE (2.4 kbps)
• Number of memory channel	: 105 (incl. 2 scan edges and 3 calls)
• Tuning steps	: 5, 6.25, 10, 12.5, 20, 25, 50, 100 kHz
• Frequency stability	: ±2.5 ppm (–10˚C to +60˚C)
• Operating temperature range	: –10˚C to +60˚C (–22˚F to +140˚F)
• Antenna connector	: Type-N (50 Ω)
• Power supply requirement	: 13.8 V DC ±15% (Negative ground)
• Current drain (at 13.8 V DC)	: Transmit Less than 7 A (at 10 W) Receive Less than 1.5 A (AF max.)
• Dimensions (projections not included)	:
Main unit	141(W)×40(H)×165.8(D) mm; $5^{9}/_{16}$(W)×$1^{9}/_{16}$(H)×$6^{17}/_{32}$(D) in
Remote controller (RC-24)	150(W)×50(H)×49.5(D) mm; $5^{29}/_{32}$(W)×$1^{31}/_{32}$(H)×$6^{15}/_{16}$(D) in
• Weight (Approx.)	:
Main unit	1.2 kg; 2 lb 10 oz
Remote controller (RC-24)	220 g; 7.7 oz

■ TRANSMITTER

• Output power (at 13.8 V DC)	: 10/1 W
• Modulation	: Variable reactance frequency modulation (FM) Quadrature modulation (Digital)
• Maximum frequency deviation (FM)	: ±5.0 kHz
• Spurious emissions	: Less than –50 dB
• Microphone connector	: 8-pin modular jack (600 Ω)

■ RECEIVER

• Receive system	: Triple conversion superheterodyne system (FM, DV) Double conversion superheterodyne (DD)
• Intermediate frequencies	: 1st IF: 243.95 MHz, 2nd IF: 31.05 kHz, 3rd IF: 450 kHz (FM, DV) 1st IF: 243.95 MHz, 2nd IF: 10.7 MHz (DD)
• Sensitivity	: Less than 0.18 μV (–122 dBm) at 12 dB SINAD (FM) Less than 0.35 μV (–116 dBm) at BER 1×10^{-2} (DV) Less than 1.58 μV (–103 dBm) at BER 1×10^{-2} (DD)
• Selectivity (typical)	: More than 12 kHz/6dB, Less than 30 kHz/60 dB (FM) More than 6 kHz/6dB, Less than 18 kHz/50 dB (DV) More than 140 kHz/6dB, Less than 520 kHz/40 dB (DD)
• Spurious and image rejection	: More than 50 dB
• Audio output power (at 13.8 V DC)	: 2.0 W at 10% distortion with an 8 Ω load
• Squelch sensitivity (at threshold)	: Less than 0.18 μV (–122 dBm) (FM only)
• Ext. speaker connector	: 2-conductor 3.5 (d) mm/($^{1}/_{8}$")/8 Ω

All stated specifications are subject to change without notice or obligation.

SECTION 2 INSIDE VIEWS

● **MAIN UNIT**

Top view

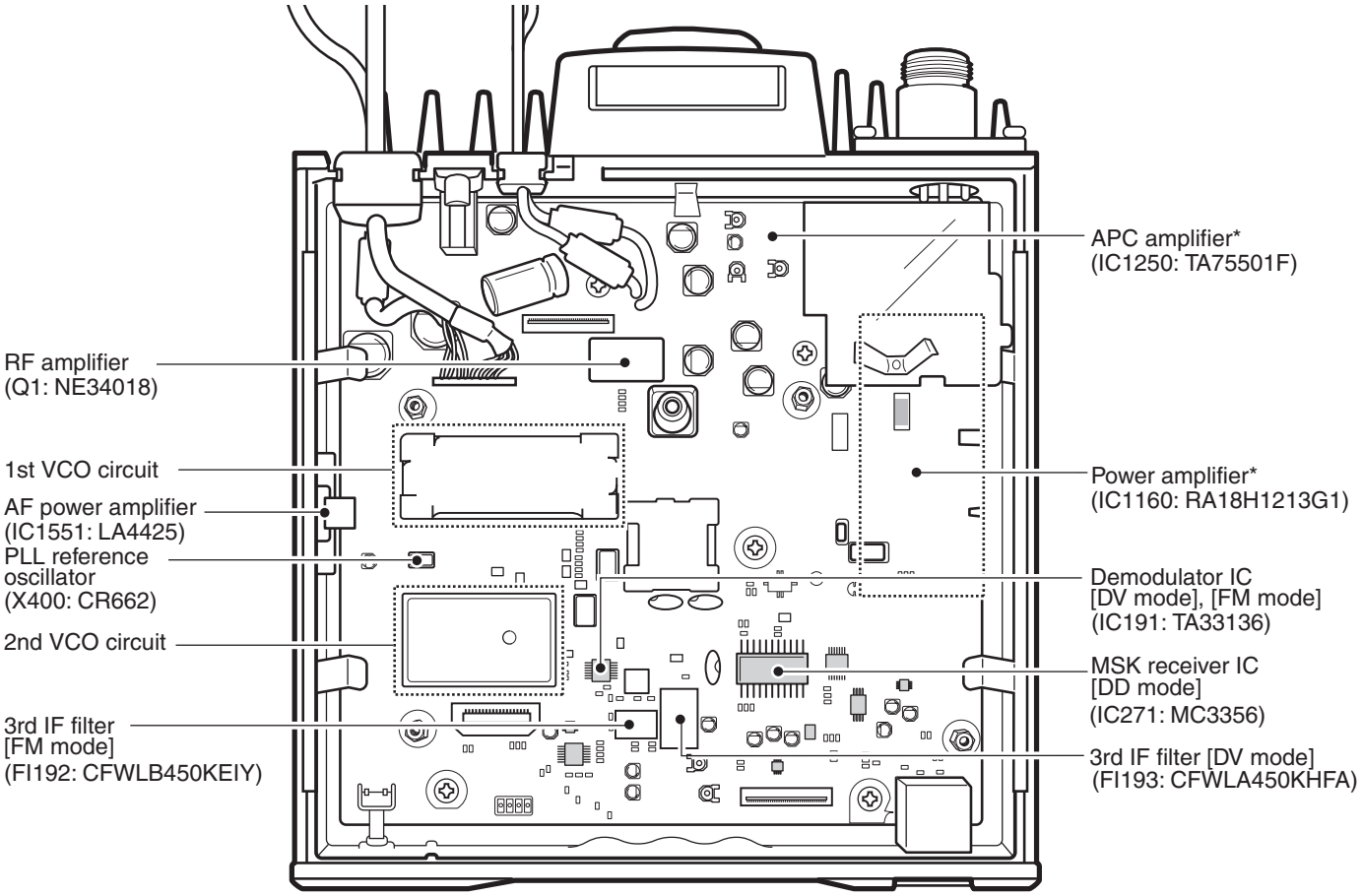

*: Located under side of this point

● **LOGIC-1 UNIT**

Top view

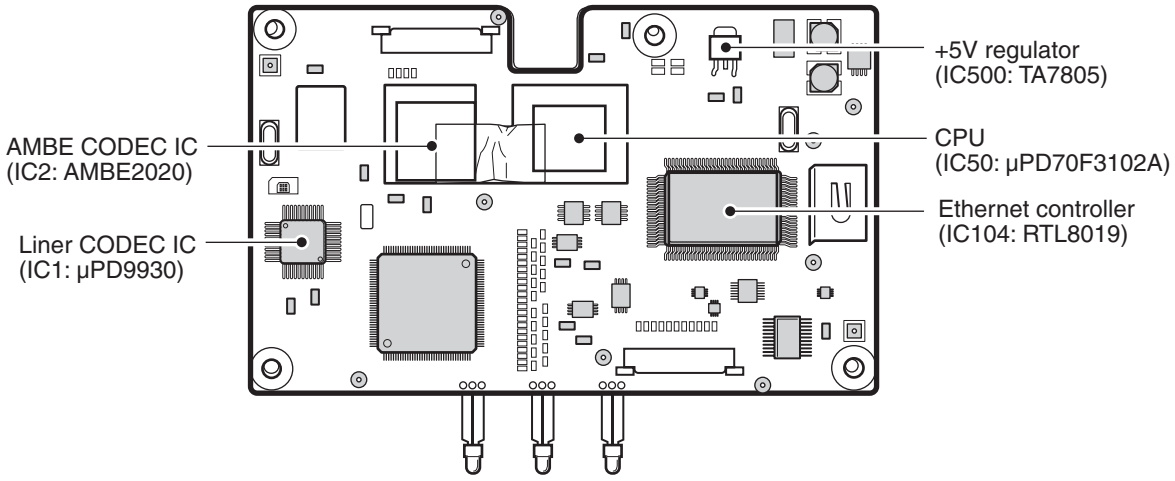

SECTION 3 DISASSEMBLY INSTRUCTIONS

3-1 ID-1

● REMOVING THE LOGIC-1 UNIT

① Unscrew 1 screw Ⓐ, and remove the cover Ⓑ.
② Remove 2 main shield plates Ⓒ.
③ Disconnect 2 cables Ⓓ, and unsolder 1 point Ⓔ.
④ Unscrew 4 screws Ⓕ, and remove the earth spring Ⓖ.
⑤ Take off the LOGIC-1 unit.

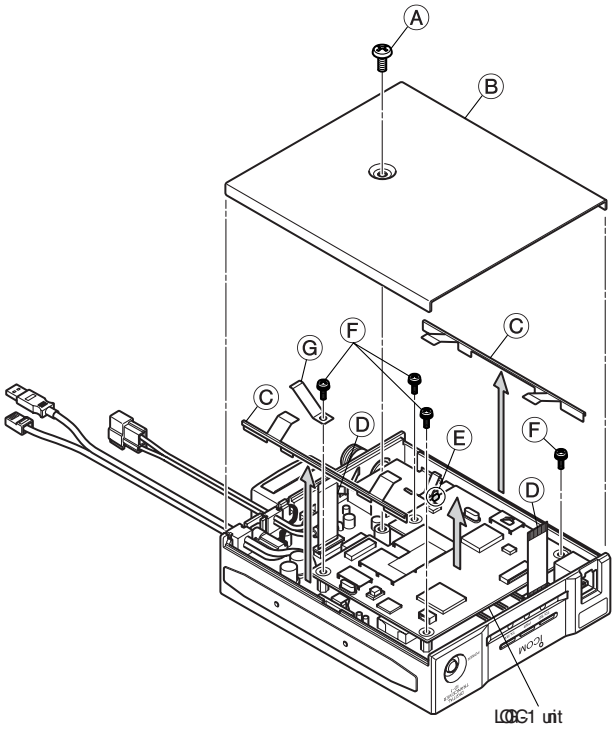

● REMOVING THE MAIN UNIT

① Unsolder 5 points Ⓐ, and remove the ANT plate Ⓑ.

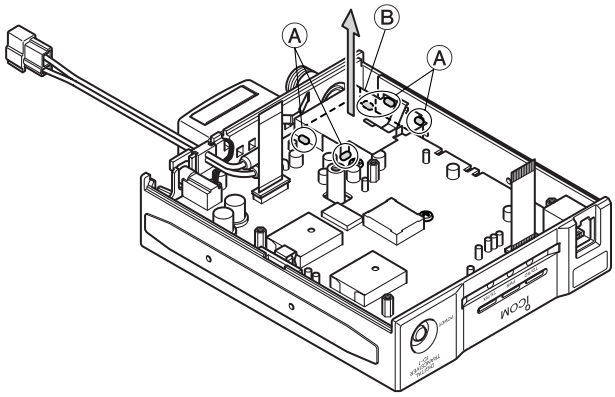

Continue to right above.

② Unsolder 11 points Ⓒ.
③ Unscrew 2 screws Ⓓ, and remove the ANT connector Ⓔ.
④ Take off the cable Ⓕ from the chassis.
⑤ Disconnect the cable Ⓖ, and remove the TR-A clip Ⓗ.
⑥ Unscrew 7 screws Ⓘ, and take off the MAIN unit.

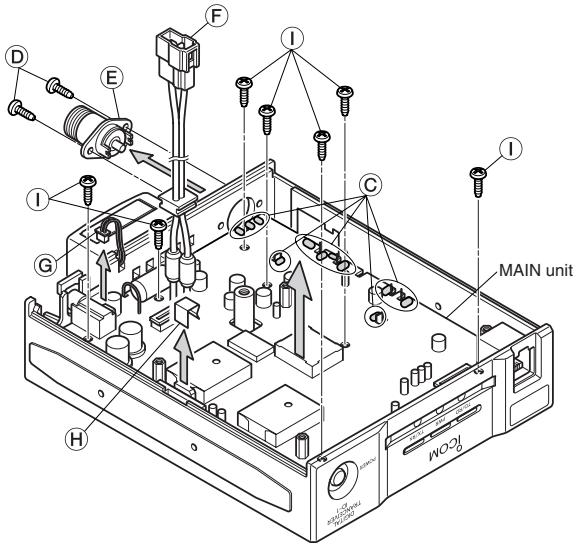

3-2 RC-24

● REMOVING THE FRONT UNIT

① Unscrew 4 screws Ⓐ, and remove the rear plate Ⓑ.
② Unscrew 3 screws Ⓒ, and remove the front panel Ⓓ.
③ Disconnect the cable Ⓔ, and remove the knob Ⓕ.
④ Unscrew 5 screws Ⓖ, and take off the FRONT unit.

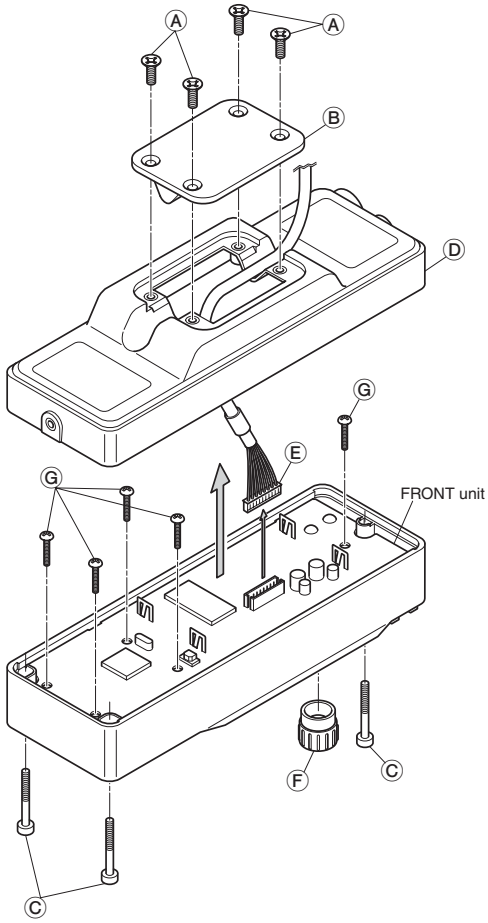

SECTION 4 CIRCUIT DESCRIPTION

4-1 RECEIVER CIRCUITS

4-1-1 ANTENNA SWITCHING CIRCUIT (MAIN UNIT)

The antenna switching circuit functions as a low-pass filter while receiving and a resonator circuit while transmitting. This circuit does not allow transmit signals to enter the receiver circuits.

Received signals from the antenna connector (CHASSIS; J1) are passed through the low-pass filter which contains strip-line and C1198, and are then applied to the λ/4 type antenna switching circuit (D1160–D1162, L1162).

While receiving, no voltage is applied to D1160–D1162. Thus, the receive line and ground are disconnected and received signals are applied to the RF circuit.

4-1-2 RF CIRCUIT (MAIN UNIT)

The RF circuit amplifies signals within the range of frequency coverage and filters out-of-band signals.

The signals from the antenna switching circuit pass through the high-pass filter (L1–L4, C2–C5) and then applied to the RF amplifier (Q1). The amplified signals are passed through the bandpass filter (FI1) and then applied to the another RF amplifier (Q2). The amplified signals are passed through the another bandpass filter (FI2) to suppress unwanted signals.

The filtered signal is applied to the 1st mixer circuit.

4-1-3 1ST MIXER AND 1ST IF CIRCUITS (MAIN UNIT)

The 1st mixer circuit converts the received signals into fixed frequency of the 1st IF signal with the 1st LO signal. By changing the 1st LO signal, only the desired frequency passes through the bandpass filter at the next stage of the 1st mixer circuit.

The RF signals from the bandpass filter (FI2) are mixed with the 1st LO signal, where come from the 1st VCO circuit, at the 1st mixer circuit (IC71) to produce a 243.95 MHz 1st IF signal. The 1st IF signal is passed through the bandpass filter (FI71) to suppress unwanted signals and pass only the desired signals.

The filtered signal is applied to the 2nd IF circuit.

4-1-4 2ND MIXER AND 2ND IF CIRCUITS (MAIN UNIT)

The 2nd mixer circuit converts the 1st IF signal into the 2nd IF signal with the 2nd LO signal.

• DV/FM MODE

The filtered 1st IF signal from the bandpass filter (FI71) is mixed with the 2nd LO signal (275.00 MHz), where come from 2nd VCO circuit, at the 2nd mixer circuit (Q131) to produce the 2nd IF signal (31.05 MHz). The 2nd IF signal is passed through the MCF (FI191) via the DV/FM switch (D131). The filtered signal is applied to the IF amplifier (Q191) and then applied to the 3rd mixer circuit in the demodulator IC (IC191).

• DD MODE

The filtered 1st IF signal from the bandpass filter (FI71) is mixed with the 2nd LO signal (233.25 MHz), where come from the 2nd VCO circuit, at the 2nd mixer circuit (Q131) to produce the 2nd IF signal (10.7 MHz). The 2nd IF signal is passed through the bandpass filter (FI272) to remove unwanted heterodyned frequencies via the DD switch (D273). The filtered signal is amplified at the IF amplifier (Q270) and then passed through the another bandpass filter (FI273). The filtered signal is applied to the another IF amplifier (Q271) and then applied to the MSK receiver IC (IC271).

• RF AND IF CIRCUITS

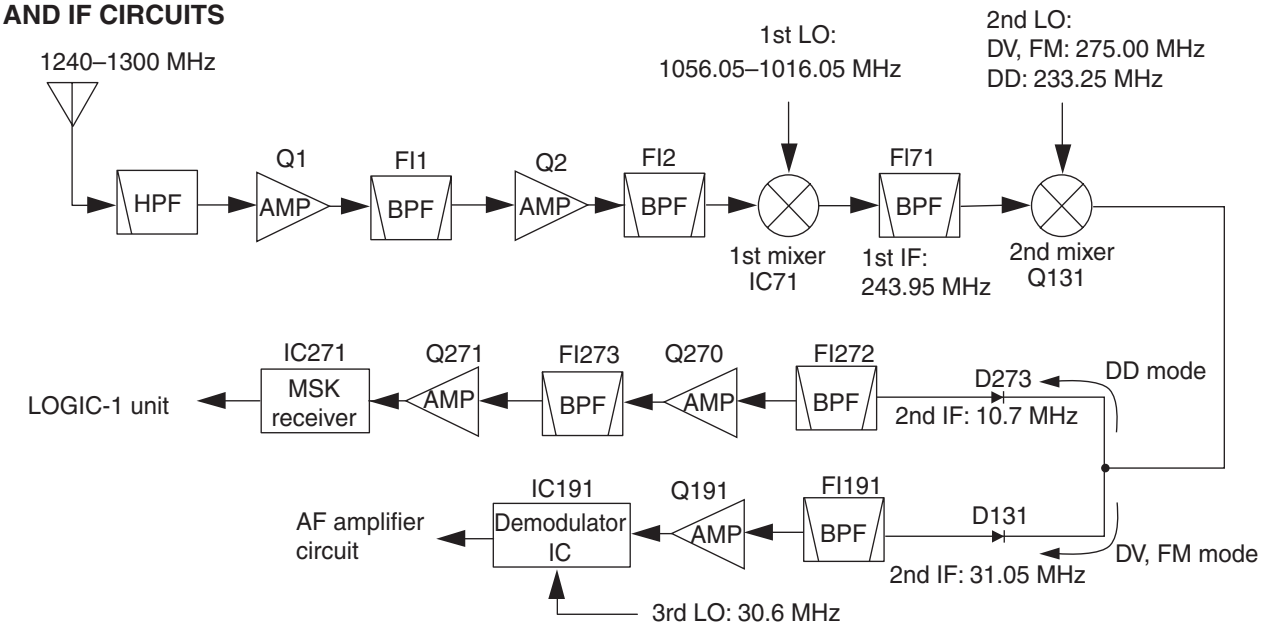

4-1-5 DEMODULATOR CIRCUITS (MAIN UNIT)

• DV MODE

The demodulator IC (IC191) contains the 3rd mixer, limiter amplifier, quadrature detector, active filter and noise amplifier, etc.

The amplified signal from the IF amplifier (Q191) is applied to the 3rd mixer section of the demodulator IC (IC191, pin 16) and is then mixed with the 3rd LO signal to be converted into the 450 kHz 3rd IF signal. The 3rd IF signal from the 3rd mixer section (IC191, pin 3) passes through the ceramic filter (FI193) via the mode switches (D192, D193) to remove unwanted heterodyned frequencies. The filtered signal is amplified at the limiter amplifier section (IC191, pin 5) and then applied to the quadrature detector section (IC191, pins 10, 11) to demodulate the digital audio signals.

The 3rd LO signal (30.6 MHz) is produced at the 1st PLL circuit by doubling it's reference frequency (X400: 15.3 MHz) at the doubler (Q550).

The digital audio signals from the demodulator IC (IC191, pin 9) are amplified at IC343 (pins 6, 7) and then applied to the mode switch (IC342, pins 1, 7).

The switched signals from the mode switch (IC342, pin 1) are applied to the LOGIC-1 unit via J1801 (pin 20).

• DD MODE

The MSK receiver IC (IC271) contains the limiter amplifier, quadrature detector, etc.

The amplified signal from the IF amplifier (Q271) is applied to the limiter amplifier section of the MSK receiver IC (IC271, pin 7) and then applied to the quadrature detector section (IC271, pin 11) to demodulate to the data signals.

The demodulated data signals from the MSK receiver IC (IC271, pin 13) are amplified at IC343 (pins 1, 2) and then applied to the mode switch (IC342, pins 1, 6).

The switched signals from the mode switch (IC342, pin 1) are applied to the LOGIC-1 unit via J1801 (pin 20).

• FM MODE

The same demodulator IC that is used for DV mode operation is used for FM demodulation.

The amplified signal from the IF amplifier (Q191) is applied to the 3rd mixer section of the demodulator IC (IC191, pin 16) and is then mixed with the 3rd LO signal to be converted into the 450 kHz 3rd IF signal. The 3rd IF signal from the 3rd mixer section (IC191, pin 3) passes through the ceramic filter (FI192) via the mode switches (D192, D193) to remove unwanted heterodyned frequencies. The filtered signal is amplified at the limiter amplifier section (IC191, pin 5) and then applied to the quadrature detector section (IC191, pins 10, 11) to demodulate the AF signals.

The AF signals are output from the demodulator IC (IC191, pin 9) and are then applied to the AF amplifier circuit.

4-1-6 DIGITAL CIRCUITS (LOGIC-1 UNIT)

The digital circuits convert the demodulated digital audio signals into the analog audio signals and convert the demodulated data signals format for PC communication via the USB controller (for DV mode: low speed data operation) or Ethernet controller (for DD mode).

The demodulated digital audio or data signals from the mode switch (MAIN unit: IC342, pin 1) are applied to the GMSK MODEM IC (IC150, pin 11). The applied signals are synchronized with the clock signal, then the synchronized

• 3RD IF AND DEMODULATOR CIRCUIT (DV/FM MODE)

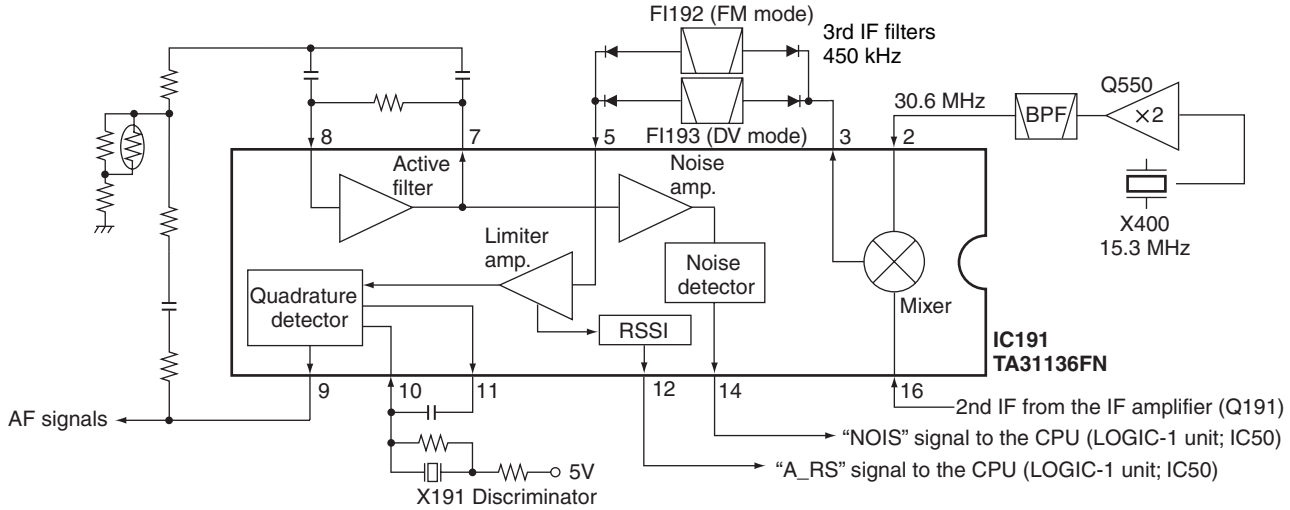

• DIGITAL CIRCUITS (LOGIC-1 UNIT)

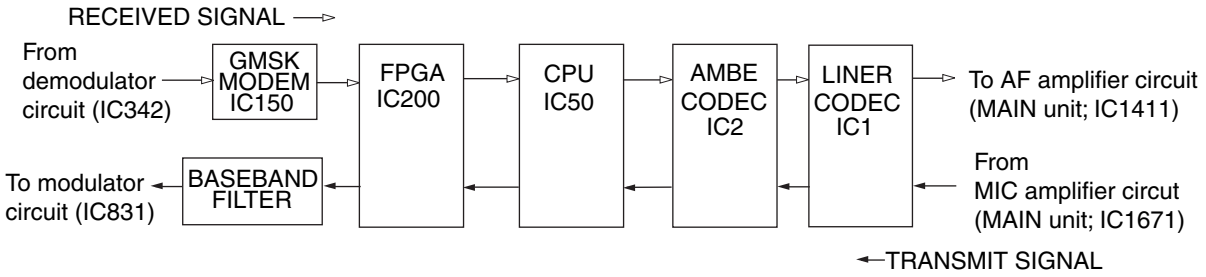

signals are applied to the CPU (IC50) via the FPGA IC (IC200).

• DV MODE (VOICE OPERATION)
The digital audio signals from the CPU (IC50) are applied to the AMBE CODEC IC (IC2) for code expansion, and are then applied to the linear CODEC IC (IC1). The digital audio signals are converted into analog audio signals at the D/A converter section and then output from pin 34 (IC1)

The analog audio signals are applied to the mode switch (MAIN unit; IC1411, pins 1, 7) via the J101 (pin 30) as “DAF” signal.

• DD MODE/DV MODE (LOW SPEED DATA OPERATION)
While operating in DD mode, the output signals from the CPU (IC50) are applied to the connected PC via the Ethernet controller (IC104).

While operating in DV mode (low speed data operation), the output signals from the CPU (IC50) are applied to the connected PC via the USB controller (IC550).

4-1-7 AF AMPLIFIER CIRCUIT (MAIN UNIT)
The AF amplifier circuit amplifies the demodulated AF signals to a level needed to drive a speaker.

• DV MODE
The AF signals from the LOGIC-1 unit are applied to the mode switch (IC1411, pins 1, 7) and then amplified at the buffer amplifier (IC1460, pins 1, 3). The buffer amplified signals are applied to the filter switch (IC1462, pins 1, 6) to select the appropriate AF filters for DV mode and then passed through the low-pass (IC1461, pins 8, 10) and high-pass (IC1461, pins 12, 14) filters. The filtered signals are passed through the filter switch (IC1463, pins 1, 6) and are then applied to the volume controller (IC1550, pins 2, 9).

• FM MODE
The AF signals from the demodulator IC (IC191, pin 9) are applied to the mode switch (IC1411, pins 1, 6) and then applied to the buffer amplifier (IC1460, pins, 1, 3). The buffer amplified signals are applied to the filter switch (IC1462, pins, 1, 7) to select the appropriate AF filters for FM mode and then passed through the low-pass (IC1460, pins 6, 7, 8, 9) and high-pass (IC1460, pins 13, 14) filters. The filtered signals are passed through the filter switch (IC1463, pins 1, 7) and are then applied to the volume controller (IC1550, pins 2, 9).

The switched AF signals from the filter switch (IC1463, pin 1) are applied to the volume controller (IC1550, pins 2, 9). The level adjusted AF signals (IC1550, pin 9) are applied to the AF power amplifier (IC1551, pins 1, 4) via the AF mute switch (Q1550).

The AF mute switch is mute the AF signals while digital squelch, call sign squelch, noise squelch, tone squelch are closed, the audio level is set to minimum position or transmitting.

The power amplified AF signals from the AF power amplifier (IC1551, pin 4) are applied to the speaker that is connected to [SP] jack (J1550).

4-1-8 SQUELCH CIRCUITS (MAIN UNIT)
• DIGITAL CODE/CALL SIGN SQUELCH (DV MODE ONLY)
The digital code/call sign squelch circuit detects matched digital code/call sign and opens the squelch only when receiving a signal containing a matching digital code/call sign. When digital code/call sign squelch is in use, and a signal with a unmatched digital code/call sign is received, the digital code/call sign squelch circuit mutes the AF signals.

The detected digital audio signals from IC191 (pin 9) are applied to the CPU (LOGIC-1 unit; IC50) via the mode switch (IC342, pins 1, 7), GMSK MODEM IC (LOGIC-1 unit; IC150) and FPGA IC (LOGIC-1 unit; IC200). Then the CPU analyzes the digital code/call sign and output the AF mute signal as “RMUT” from the pin 102 to the filter switch (IC1463, pin 2) via the mute switch (LOGIC-1 unit; Q155).

• NOISE SQUELCH (FM MODE ONLY)
The noise squelch circuit cuts out AF signals when no RF signals are received. By detecting noise components in the AF signals, the squelch circuit switches the filter switch (IC1463).

Portion of the AF signals from the demodulator IC (IC191, pin 9) are applied to the active filter section in the demodulator IC (IC191, pin 8). The active filter section filters and amplifies noise components only. The amplified noise signals are converted into the pulse-type signals at the noise detector section. The detected signals output from pin 14 (IC191).

The detected signals from the demodulator IC (IC191, pin 14) are amplified at the noise amplifiers (Q192, Q193) and then applied to the noise detector (D195). The detected signals are applied to the CPU (LOGIC-1 unit; IC50, pin 32) as "NOIS" signals. Then the CPU analyzes the noise condition and outputs the AF mute signal as “RMUT” from the pin 102 to the filter switch (IC1463, pin 2) via the mute switch (LOGIC-1 unit; Q155).

• TONE SQUELCH (FM MODE ONLY)
The tone squelch circuit detects tone signals and opens the squelch only when receiving a signal containing a matching subaudible tone (CTCSS). When tone squelch is in use, and a signal with a unmatched or no subaudible tone is received, the tone squelch circuit mutes the AF signals even when noise squelch is open.

A portion of “DEAF” signals from the buffer amplifier (IC1460, pin 1) are applied to the low-pass filters (IC1461, pins 1, 2, 5, 7) to remove AF (voice) signals. The filtered signals are applied to the CTCSS decoder in the CPU (LOGIC-1 unit, IC50, pin 33) as “TONI” signals. Then the CPU analyzes the decoded tone signals and output the AF mute signal as “RMUT” from the pin 102 to the filter switch (IC1463, pin 2) via the mute switch (LOGIC-1 unit; Q155).

4-1-9 S-METER CIRCUITS (MAIN UNIT)
Some of the amplified IF signal is applied to the S-meter detector section in the demodulator IC (IC191) to be converted into DC voltage. The output signal from the demodulator IC (IC191, pin 12) is applied to the mode switch (IC341, pins 10, 11) and then applied to the CPU (LOGIC-1 unit; IC50). The CPU then outputs S-meter control signal to the RC-24 or connected PC via the USB controller (LOGIC-1 unit; IC550).

4-2 TRANSMITTER CIRCUITS

4-2-1 MICROPHONE AMPLIFIER CIRCUIT (MAIN UNIT)

The microphone amplifier circuit amplifies audio signals from the microphone to a level needed for the modulation circuit.

While connecting the microphone to ID-1, the AF signals from the microphone (J1600, pin 6) are applied to the microphone amplifier (Q1673) via the microphone mute switch (Q1670). The amplified AF signals are applied to the mode switch (IC1670, pins 1, 6, 7).

While connecting the microphone to RC-24, the AF signals from the microphone (RC24; J1) are applied to the MAIN unit (J1600, pin 6) via the buffer amplifier (RC-24; Q13).

• DV MODE

The amplified AF signals from microphone amplifier (Q1673) are amplified at the ALC amplifier (IC1672, pins 3, 5) via the mode switch (IC1670, pins 1, 7). The amplified signals are applied to the IDC amplifier (IC1671, pins 6, 7) and then passed through the splatter filter (IC1671, pins 1, 3).

The filtered signals are applied to the LOGIC-1 unit via the J1801 (pin 10).

• FM MODE

The amplified AF signals from microphone amplifier (Q1673) are passed through the mode switch (IC1670, pins 1, 6) and then applied to the IDC amplifier (IC1671, pins 6, 7). The amplified signals are passed through the splatter filter (IC1671, pins 1, 3) and mode switch (IC1673, pins 1, 6).

The CTCSS signals (CTCS) from the CPU (LOGIC-1 unit; IC50) via (LOGIC-1 unit; IC57, pin 1) are mixed with the AF signals from the IDC amplifier (IC1671, pin 7). The mixed signals are passed through the splatter filter (IC1671, pins 1, 3) and mode switch (IC1673, pins 1, 6).

The switched AF signals (IC1673, pin 6) are applied to the modulation circuit.

4-2-2 DIGITAL CIRCUITS (LOGIC-1 UNIT)

• DV MODE (VOICE OPERATION)

The AF signals from the splatter filter (MAIN unit; IC1671, pin 1) are applied to the liner CODEC IC (IC1, pin 24) to convert into digital voice data at the A/D converter section as the "DAMOD" signal. The converted digital audio signals are applied to the AMBE CODEC IC (IC2) for code compression and are then applied to the CPU (IC50).

The digital audio signals are processed at the CPU (IC50) and then applied to the FPGA IC (IC200).

• DD MODE/DV MODE (LOW SPEED DATA OPERATION)

While operating in DD mode the data signal from connected PC are applied to the Ethernet controller (IC104) and then applied to the CPU (IC50)

While operating in DV mode (low speed data operation) the data signal from connected PC are applied to the USB controller (IC550) and then applied to the CPU (IC50)

The applied data signals to the CPU (IC50) are processed and then applied to the FPGA IC (IC200).

The output signals from the CPU (IC50) are applied to the FPGA IC (IC200) to convert to the I/Q baseband signals and then output from pins 75–80, 82–87, 92–99 (IC200). The I/Q baseband signals are mixed at the resisters (R250–R293) and then pass through the baseband filters (IC300, IC301, IC302).

The filtered signals (I/Q baseband signals) are applied to the MAIN unit via J400 (pins 1, 3).

4-2-3 MODULATION CIRCUIT (MAIN UNIT)

• DV/DD MODE

The modulation circuit modulates the 2nd LO signal at the quadrature modulation circuit (IC890) using the I/Q baseband signals from the LOGIC-1 unit.

The I/Q baseband signals from the LOGIC-1 unit are amplified at the I/Q baseband amplifiers (IC832, pins 1, 2, 6, 7) and then applied to amplifier section (pins 4, 7) of the quadrature modulator IC (IC890, pins 4, 7, 14). The 2nd LO signal is applied to the quadrature modulator IC (IC890, pin 8)

• MODULATION AND TRANSMIT CIRCUITS

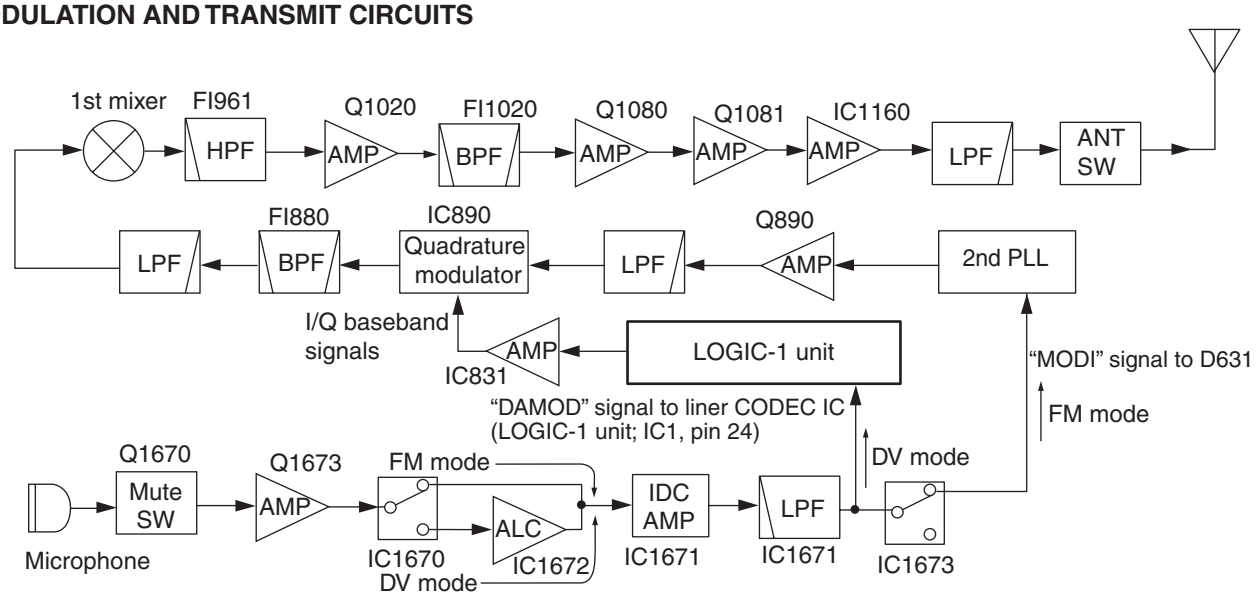

and then mixed with the amplified I/Q baseband signals. The modulated signal is output from pin 14.

The modulated signal (IC890, pin 14) is passed through the bandpass (FI880) and low-pass (L892, L893, C904–C908) filters and then applied to the 1st mixer circuit.

• FM MODE

The modulation circuit modulates the 2nd LO signal using the microphone audio signals.

The switched AF signals from the mode switch (IC1673, pin 6) change the reactance of varactor diode (D631) to modulate the 2nd LO signal at the 2nd VCO circuit (Q631, D630). The modulated signal from the 2nd VCO circuit is amplified at the buffer amplifiers (Q632, Q771) and is then applied to the T/R switch (D770). The switched signal is applied to the 2nd LO amplifier (Q890) and then passed through the low-pass filter (L891, C896–C898), quadrature modulator IC (IC890), bandpass filter (FI880) and low-pass filter (L892, L893, C904–C908).

The filtered signal is applied to the 1st mixer circuit.

4-2-4 1ST MIXER CIRCUITS (MAIN UNIT)

The filtered signal from the low-pass filter (L892, L893, C904 –C908) is mixed with the 1st LO signal, generated at the 1st VCO circuit (Q471, Q472, D472) via the buffer amplifier (Q710), at the 1st mixer circuit (IC960, pin 1, 6) to convert into the RF signal. The RF signal from the 1st mixer circuit (IC960, pin 6) is passed through the bandpass filter (FI961) and then amplified at the RF amplifier (IC1021). The amplified signal is passed through the bandpass filter (FI1020) to suppress spurious components.

4-2-5 DRIVE/POWER AMPLIFIER CIRCUITS (MAIN UNIT)

The filtered RF signal from the bandpass filter (FI1020) is amplified at the drive (Q1080, Q1081) and power (IC1160) amplifiers to obtain a stable 10 W of output power.

The power amplified signal from the power amplifier (IC1160, pin 4) is passed through the antenna switch (D1160), SWR detector circuit (D1166, D1170), low-pass filter which contains strip-line and C1198, and then applied to the antenna connector (CHASSIS unit: J1).

4-2-6 APC CIRCUIT (MAIN UNIT)

The APC circuit protects the driver and power amplifiers from a mismatched output load and stabilizes the output power.

The SWR detector circuit (D1166, D1170) detects the forward signals and reflection signals, and converts it into DC voltage. The output voltage is at a minimum level when the antenna impedance is matched with 50 Ω and is increased when it is mismatched.

The detected voltage is applied to the APC amplifier (IC1250, pins 3, 4) and is compared with the reference voltage which is supplied from the CPU (LOGIC-1 unit: IC50, pin 38) as "PCON" signal.

When antenna impedance is mismatched, the detected voltage exceeds the power setting voltage. The output voltage of the APC amplifiers (IC1250, IC1251) controls the bias voltage of the drive (Q1080) and power (IC1160) amplifiers to reduce the output power.

4-3 PLL CIRCUITS

4-3-1 PLL CIRCUITS (MAIN UNIT)

The PLL circuit provides stable oscillation of the 1st LO frequencies and 2nd LO frequency. The PLL output compares the phase of the divided VCO frequency to the reference frequency. The PLL output frequency is controlled by the divided ratio (N-data) of a programmable divider.

4-3-2 1ST PLL CIRCUIT (MAIN UNIT)

The 1st PLL circuit oscillates the 1st LO frequencies, and signals are applied to the 1st mixer circuit. The oscillated

• PLL CIRCUITS

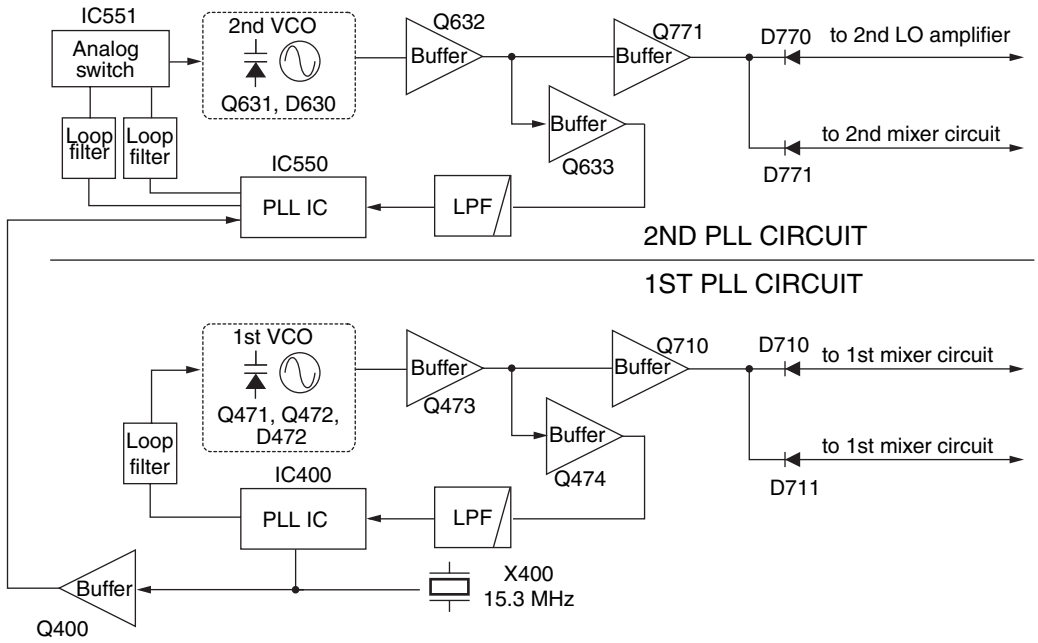

signal from the 1st VCO (Q471, Q472, D471) is applied to the buffer amplifiers (Q473, Q474) and is then applied to the PLL IC (IC400, pin 6).

The PLL IC contains a prescaler, programmable counter, programmable divider and phase detector, etc.

The applied signal is divided at the prescaler and programmable counter section by the N-data ratio from the CPU (LOGIC-1 unit; IC50). The divided signal is detected on phase at the phase detector using the reference frequency and output from pin 4. The output signal is passed through the loop filter and is then applied to the 1st VCO circuit.

The oscillated signal at the 1st VCO is buffer amplified at Q473 and then passed through the low-pass (L474, L475, C488–C492) and high-pass (L47–L477, C493–C497) filters. The filtered signal is applied to the buffer amplifier (Q710) and then applied to the T/R switch (D710, D711).

The receive 1st LO signal from the T/R switch (D711) is applied to the 1st mixer circuit (IC71).

The transmit signal from the T/R switch (D710) is applied to the 1st mixer circuit (IC960).

A portion of the signal from the buffer amplifier (Q473) is fed back to the PLL IC (IC400, pin 6) via the buffer amplifier (Q474) as the comparison signal.

4-3-3 2ND PLL CIRCUIT (MAIN UNIT)

The 2nd PLL circuit oscillates the 2nd LO frequency, and the signal is applied to the 2nd mixer circuits.

The signal oscillated at the 2nd VCO circuit (Q631, D630) is amplified at the buffer amplifiers (Q632, Q633), then applied to the PLL IC (IC550, pins 2, 19). The applied signal is divided at the prescaler and programmable counter section by the N-data ratio from the CPU (LOGIC-1 unit; IC50). The divided signal is detected on phase at the phase detector using the reference frequency and output from pins 8, 13 (IC550).

While operating in DV/DD mode, the detected signal from pin 13 (IC550) is passed through the loop filter (R555–R557, C564, C567) and then applied to the 2nd VCO circuit via the mode switch (IC551, pins 1, 7).

While operating in FM mode, the detected signal from pin 8 (IC550) is passed through the loop filter (R559–R561, C571, C574) and then applied to the 2nd VCO circuit via the mode switch (IC551, pins 1, 6).

The oscillated signal at the 2nd VCO is amplified at the buffer amplifiers (Q632 Q771), and is then applied to the T/R switch (D770, D771).

The receive 2nd LO signal from the T/R switch (D771) is applied to the 2nd mixer circuit (Q131).

The transmit signal from the T/R switch (D770) is applied to the 2nd LO amplifier (Q890).

A portion of the signal from the buffer amplifier (Q632) is fed back to the PLL IC (IC550, pins 2, 19) via the buffer amplifier (Q633) and low-pass filter (L631, C653, C654) as the comparison signal.

4-4 POWER SUPPLY CIRCUITS

4-4-1 LOGIC-1 UNIT VOLTAGE LINE

Line	Description
5V	Common 5 V controlled by the +5 V regulator circuit (Q50 and Q51) using the “PWRS” signal from the CPU (IC50, pins 101).
3.3V	Common 3.3 V converted from the 5V line by the 3.3V regulator circuit (IC502).
3.2V	Common 3.2 V converted from the 5 V line by the 3.2V regulator circuit (IC4).

4-4-2 MAIN UNIT VOLTAGE LINE

Line	Description
HV	The voltage from a DC power supply.
VCC	The same voltage as the HV line which is controlled by the power switching circuit (Q23, Q24). When the power switch is pushed, the CPU outputs the "PWR" control signal to the power switching circuit to turn the circuit ON.
+9	Common 9 V converted from the HV line at the +9 CTRL circuit (IC1330). The output voltage is applied to the volume controller (IC1550), etc.
+5	Common 5 V converted from the +9V line at the 5 V regulator circuit (IC1331). The output voltage is applied to the mode switches (IC1462, IC1463), etc.
DM+5	Common 5 V converted from the +9V line at the 5 V regulator circuit (IC830). The output voltage is applied to the modulation amplifiers (IC831, IC832), etc.
T+9	Transmit 9 V controlled by the T+9 regulator circuit (Q1333, Q1334, D1331) using the "TXS" signal from the CPU (LOGIC-1 unit; IC50, pin 94). The output voltage is applied to the APC amplifier (IC1250), etc.
T+5	Transmit 5 V controlled by the T+5 regulator circuit (Q1336, D1332, D1333) using the "TXS" signal from the CPU (LOGIC-1 unit; IC50, pin 94). The output voltage is applied to the RF amplifier (IC1021), etc.
R+5	Receive 5 V controlled by the R+5 regulator circuit (Q1337) using the "RXS" signal from the CPU (LOGIC-1 unit; IC50, pin 95). The output voltage is applied to the RF amplifier (Q2) and 1st mixer (IC71), etc.
T+3	Transmit 3 V controlled by the T+3 regulator circuit (Q1342) using the "TXS" signal from the CPU (LOGIC-1 unit; IC50, pin 94). The output voltage is applied to the 1st mixer (IC960), etc.
R+3	Receive 3 V controlled by the R+3 regulator circuit (Q1343) using the "RXS" signal from the CPU (LOGIC-1 unit; IC50, pin 95). The output voltage is applied to the RF amplifier (Q1), etc.

4-5 PORT ALLOCATIONS

4-5-1 CPU (LOGIC-1 UNIT; IC50)

Pin number	Port name	Description
29	MU/D	Input port for up/down signal from the connected microphone.
32	NOIS	Input port for the noise signal from the noise detector (MAIN unit; D195).
31	RSSI	Input port for the S-meter signal from the demodulator IC (MAIN unit; IC191, pin 12).
33	TONI	Input port for CTCSS signal from the low-pass filter (MAIN unit, IC1461, pin 1).
42	TXD1	Output data signals to the USB controller (IC550, pin 24).
43	RXD1	Input port for data signals from the USB controller (IC550, pin 25) via the (IC553).
53	SDA	I/O port for data signals from/to the EEPROM (IC54, pin 5).
54	SCL	Outputs clock signal to the EEPROM (IC54, pin 6).
61	BEEP	Outputs beep audio signals.
71	RESET	Input port for reset signal form the reset IC (IC52, pin 1).
72	P2RSC	Outputs control signal to the mode switch (MAIN unit; IC551, pin 5) via the level converter (IC55).
73	P2STC	Outputs strobe signal to the 2nd PLL IC (MAIN unit; IC550, pin 3) via the level converter (IC55).
74	PDATC	Outputs the data signal to the 1st and 2nd PLL ICs (MAIN unit; IC400, pin 15, IC550, pin 5) via the level converter (IC55).
75	PSCKC	Outputs clock signal to the 1st and 2nd PLL ICs (MAIN unit; IC400, pin 14, IC550, pin 4) via the level converter (IC55).
76	P1STC	Outputs strobe signal to the 1st PLL IC (MAIN unit; IC400, pin 16) via the level converter (IC55).
77	+5AC	Outputs control signal to the 5A (Q1345) and D+5 (Q1347) regulators via the level converter (IC55). Low: While the +5 and D+5 regulators are activated.
78	W/NSC	Outputs control signal to the DV/FM filter switches (MAIN unit; D192, D193) via the level converter (IC55). High: While DV mode is selected.
79	ADSWC	Outputs control signal to the mode switches (MAIN unit; IC1411, IC1670, IC1673) via the level converter (IC55). Low: While DV mode is selected.
80	TXLED	Outputs TX LED control signal. High: During transmit.
82	RXLED	Outputs RX LED control signal. High: While receiving or squelch is opened.

Pin number	Port name	Description
85	PCON	Outputs control signal to the TX power controller (MAIN unit; Q1250).
86	ULCK	Input port for the PLL unlock signal. High: The PLL circuit is unlocked.
87	MMUT	Outputs the microphone mute signal to the mute switch (MAIN unit; Q1670). Low: While microphone audio is muted.
93	SCAN	Outputs scan control signal to the scan switch (Q400). High: While scanning.
94	TXS	Outputs the T+5, T+3 regulator circuits (MAIN unit; Q1336, Q1342) control signal. High: During transmit.
95	RXS	Outputs the R+5, R+3 regulator circuits (MAIN unit; Q1337, Q1343) control signal. High: During receive.
96	AMUT	Outputs the AF mute signal to the AF mute switch (MAIN unit; Q1550). Low: While digital code/call sign/noise/tone squelch are closed, the audio level is set to minimum position or transmitting.
102	RMUT	Outputs the SQL mute signal to the AF switch (MAIN unit; IC1463, pin 2). High: While noise or tone squelch is closed.
103	AFCSW	Outputs AFC switch (IC352, pin 5) control signal.
105	DACK2	Outputs clock signal to the D/A converter (IC57, pin 7).
106	DADAT2	Outputs the data signal to the D/A converter (IC57, pin 6).
107	DACK1	Outputs clock signal to the D/A converter (IC56, pin 7).
108	DADAT1	Outputs the data signal to the D/A converter (IC56, pin 6).
128	FSTB	Outputs strobe signal to the FPGA IC (IC200).
129	MSTRC	Outputs strobe signal to the liner CODEC IC (IC1) and FPGA IC (IC200).
130	MDATC	Outputs the data signal to the liner CODEC IC (IC1) and FPGA IC (IC200).
131	MCLKC	Outputs clock signal to the liner CODEC IC (IC1) and FPGA IC (IC200).
132	MRESC	Outputs reset signal to the liner CODEC IC (IC1) and FPGA IC (IC200).

SECTION 5 ADJUSMENT PROCEDURES

5-1 PREPARATION

When adjusting ID-1, ADJUSTMENT SOFTWARE, JIG CABLE (see illustration on page 5-2) and OPC-1127 USB CABLE are required.

■ REQUIRED TEST EQUIPMENT

EQUIPMENT	GRADE AND RANGE		EQUIPMENT	GRADE AND RANGE	
DC power supply	Output voltage Current capacity	: 13.8 V DC : 10 A or more	Audio generator	Frequency range Measuring range	: 300–3000 Hz : 1–500 mV
Modulation analyzer	Frequency range Measuring range	: DC–1500 MHz : 0 to ±10 kHz	Attenuator	Power attenuation Capacity	: 50 or 60 dB : 20 W
Frequency counter	Frequency range Frequency accuracy Sensitivity	: 0.1–1500 MHz : ±1 ppm or better : 100 mV or better	Standard signal generator (SSG)	Frequency range Output level	: 0.1–1500 MHz : 0.1 µV to 32 mV (–127 to –17 dBm)
Digital multimeter	Input impedance	: 10 MΩ/V DC or more	AC millivoltmeter	Measuring range	: 10 mV to 10 V
RF power meter	Measuring range Frequency range Impedance SWR	: 1–20 W : 1000–1500 MHz : 50 Ω : Better than 1.2 : 1	Oscilloscope	Frequency rang Measuring range	: DC–20 MHz : 0.01–20 V
			External speaker	Input impedance Capacity	: 8 Ω : 10 W or more
Spectrum analyzer	Frequency range Spectrum bandwidth	: At least 1500 MHz : 100 kHz or more	DC Ammeter	Measuring capacity	: 3 A

■ SYSTEM REQUIREMENTS

- Microsoft® Windows® 98/98SE/Me/2000/XP
- USB port

■ ADJUSTMENT SOFTWARE INSTALLATION

① Quit all applications when Windows is running.
② Insert the CD into the appropriate CD drive.
③ Double-click the “Setup.exe” contained in the adjustment software folder in the CD drive.
④ The “Welcome to the InstallShield Wizard for adjustment software screen will appears.
Click [Next>].
⑤ The “Choose Destination Location” will appears.
Click [Next>] to install the software into the specified folder.
⑥ After the installation is completed, the “InstallShield Wizard Complete” will appears.
Click [Finish].
⑦ Eject the CD.
⑧ The adjustment software icon appears on the desktop screen.

■ STARTING SOFTWARE ADJUSTMENT

① Connect the transceiver and PC with the OPC-1127.
② Turn the transceiver power ON.
③ Boot up Windows, and double click the adjustment software icon on the desktop screen.
Then the control panel screen will appears.
④ Click [Adjustment (A)] in the menu bar and then click [Adjustment panel (F9)] in the pull down menu.
Then the adjustment screen will appears.
⑤ Set or modify adjustment data as desired.

■ OPERATING ON THE ADJUSTMENT MODE (CONNECTED COMPUTER KEYBOARD)

- Adjustment item selection* : [↑]/[↓]
- Specified value adjustment : [←]/[→]
- Mode selection : [M]
- PTT control : [T]
- RF power selection : [P]
- AF level control [UP] : [Q]
- AF level control [DOWN] : [W]
- Squelch level control [UP] : [A]
- Squelch level control [DOWN] : [S]
- Read the transceiver's data : [F5]
- All Default setting : [CTRL]+[D]

*When select the adjustment item, the adjustment frequency and operating mode are selected automatically.

• **CONNECTION**

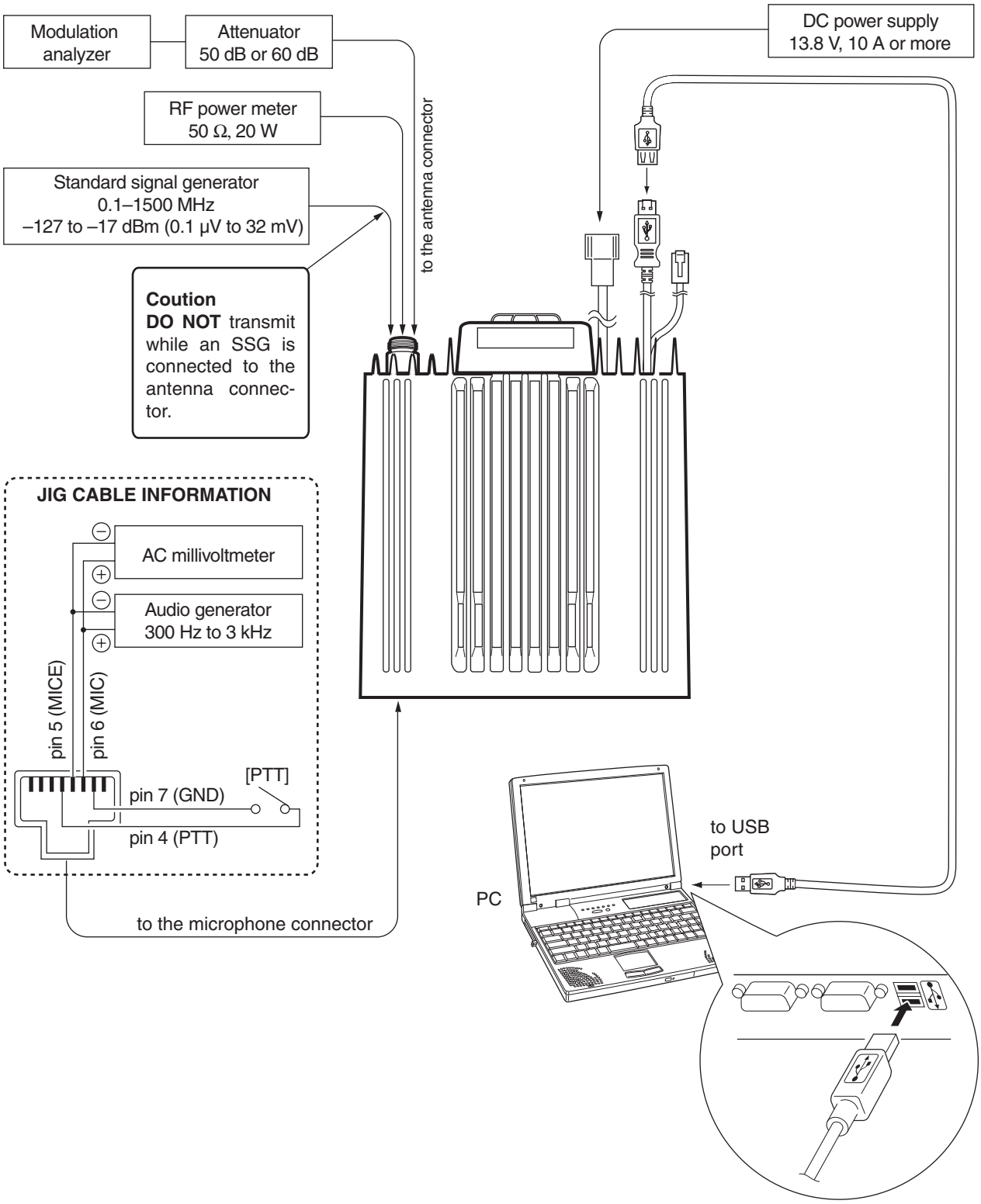
Modulation analyzer
Attenuator 50 dB or 60 dB
RF power meter 50 Ω, 20 W
Standard signal generator 0.1–1500 MHz –127 to –17 dBm (0.1 μV to 32 mV)
to the antenna connector
DC power supply 13.8 V, 10 A or more
Coution
DO NOT transmit while an SSG is connected to the antenna connector.
JIG CABLE INFORMATION
AC millivoltmeter
Audio generator 300 Hz to 3 kHz
pin 5 (MICE)
pin 6 (MIC)
[PTT]
pin 7 (GND)
pin 4 (PTT)
to the microphone connector
PC
to USB port

5-2 PLL AND CODEC ADJUSTMENT

ADJUSTMENT		ADJUSTMENT CONDITION	MEASUREMENT		VALUE	ADJUSTMENT	
			UNIT	LOCATION		UNIT	ADJUST
FPGA FREQUENCY [Set FPGA frequency]	1	• Operating freq. : 1240.00 MHz • Mode : DD mode • Receiving	LOGIC-1 unit	Connect a frequency counter to the check point "CP200".	16.3840 MHz	LOGIC-1 unit	C202
	2	• Operating freq. : 1240.00 MHz • Mode : DV mode • Receiving			9.8304 MHz	LOGIC-1 unit	C215
PLL LOCK VOLTAGE	1	• Operating freq. : 1240.00 MHz • Mode : DV mode • Connect an RF power meter or 50 Ω dummy load to the antenna connector. • Receiving	MAIN unit	Connect a digital multimeter or an oscilloscope to the check point "LV1".	More than 0.9 V	Verify	
	2	• Operating freq. : 1300.00 MHz • Receiving			Less than 4.4 V		
	3	• Mode : FM mode • Receiving	MAIN unit	Connect a digital multimeter or an oscilloscope to the check point "LV2".	3.1–4.0 V		
	4	• Mode : DD mode • Receiving			2.6–3.3 V		
	5	• Mode : FM mode • Transmitting			3.3–4.0 V		
I/Q BALANCE [FPGA D.C. voltage adjustment /DV I]	1	• Preset "IQ Direct-current output" ON. • Operating freq. : 1270.00 MHz • Mode : DV mode • Connect an RF power meter or 50 Ω dummy load to the antenna connector. • Transmitting	MAIN unit	Connect a digital multimeter or an oscilloscope to the check point "CP.I".	The same voltage of the check point "CP.IR".	PC screen	[FPGA D.C. voltage adjustment /DV I]
[FPGA D.C. voltage adjustment /DV Q]	2	• Transmitting	MAIN unit	Connect a digital multimeter or an oscilloscope to the check point "CP.Q".	The same voltage of the check point "CP.QR".	PC screen	[FPGA D.C. voltage adjustment /DV Q]
[FPGA D.C. voltage adjustment /DV I]	3	• Transmitting	Rear panel	Connect a spectrum analyzer to the antenna connector through an attenuator.	Minimum output level	PC screen	[FPGA D.C. voltage adjustment /DV I], [FPGA D.C. voltage adjustment /DV Q]
[FPGA D.C. voltage adjustment /DV Q]	4						
	• Repeat step 3 and step 4 several times.						

• **MAIN AND LOGIC-1 UNITS**

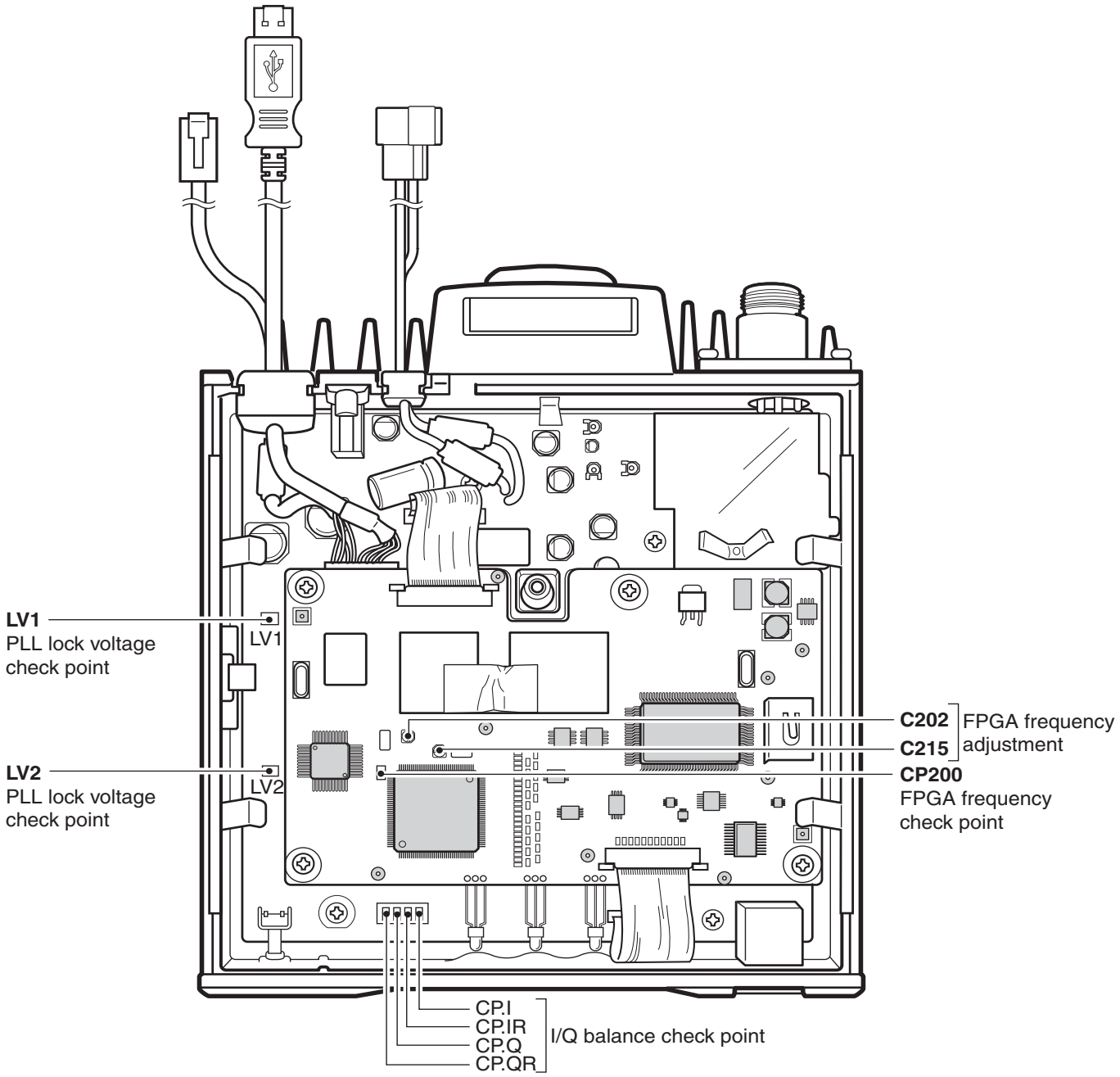

5-3 TRANSMITTER ADJUSTMENT

ADJUSTMENT		ADJUSTMENT CONDITION	MEASUREMENT		VALUE	ADJUSTMENT	
			UNIT	LOCATION		UNIT	ADJUST
YGR CURRENT [FPGA D.C. voltage adjustment /DV I]	1	• Preset R1086 and R1087 maximum counterclockwise. • Preset "IQ Direct-current output" ON. • Operating freq. : 1300.00 MHz • Mode : DV mode • Connect an RF power meter or 50 Ω dummy load to the antenna connector. • Transmitting	Rear panel	Connect an ammeter between the DC power supply and ID-1.	100 mA higher from the preset position.	MAIN unit	R1087
	2				100 mA higher from step 1.	MAIN unit	R1086
REFERENCE FREQUENCY [REF Crystal adjustment]	1	• Operating freq. : 1300.00 MHz • Mode : FM mode • Connect an RF power meter or 50 Ω dummy load to the antenna connector. • Transmitting	Rear panel	Loosely couple a frequency counter to the antenna connector.	1300.0000 MHz	PC screen	[REF Crystal adjustment]
FM CARRIER [FPGA D.C. voltage adjustment /FM I]	1	• Operating freq. : 1300.00 MHz • Mode : FM mode • Connect an RF power meter or 50 Ω dummy load to the antenna connector. • Transmitting	MAIN unit	Connect a digital multimeter or an oscilloscope to the check point "CP30".	The same voltage that during in DV mode (TX) at the check point "CP30".	PC screen	[FPGA D.C. voltage adjustment /FM I]
[FPGA D.C. voltage adjustment /FM Q]	2	• Transmitting			The same adjustment as step 1, if need.	PC screen	[FPGA D.C. voltage adjustment /FM Q]
OUTPUT POWER [TX output adjustment]	1	• Operating freq. : 1300.00 MHz • Mode : FM mode • TX power : High • Transmitting	Rear panel	Connect an RF power meter to the antenna connector.	11 W	MAIN unit	R1251
FM DEVIATION [FM modulation adjustment]	1	• Operating freq. : 1270.00 MHz • Mode : FM mode • Connect an audio generator to the [MIC] connector and set as : 1.0 kHz/20 mVrms • Set a Modulation analyzer as: HPF : OFF LPF : 20 kHz De-emphasis : OFF Detector : (P–P)/2 • Transmitting	Rear panel	Connect a modulation analyzer to the antenna connector through an attenuator.	±4.35 kHz	MAIN unit	R1704
DSP INPUT LEVEL [DSP input level adjustment]	1	• Operating freq. : 1270.00 MHz • Connect an audio generator to the [MIC] connector and set as : 1.0 kHz/20 mVrms • Connect an RF power meter or 50 Ω dummy load to the antenna connector. • Transmitting	LOGIC-1 unit	Connect an oscilloscope to the check point "CP207".	750 mVp-p	MAIN unit	R1707

• **MAIN AND LOGIC-1 UNITS**

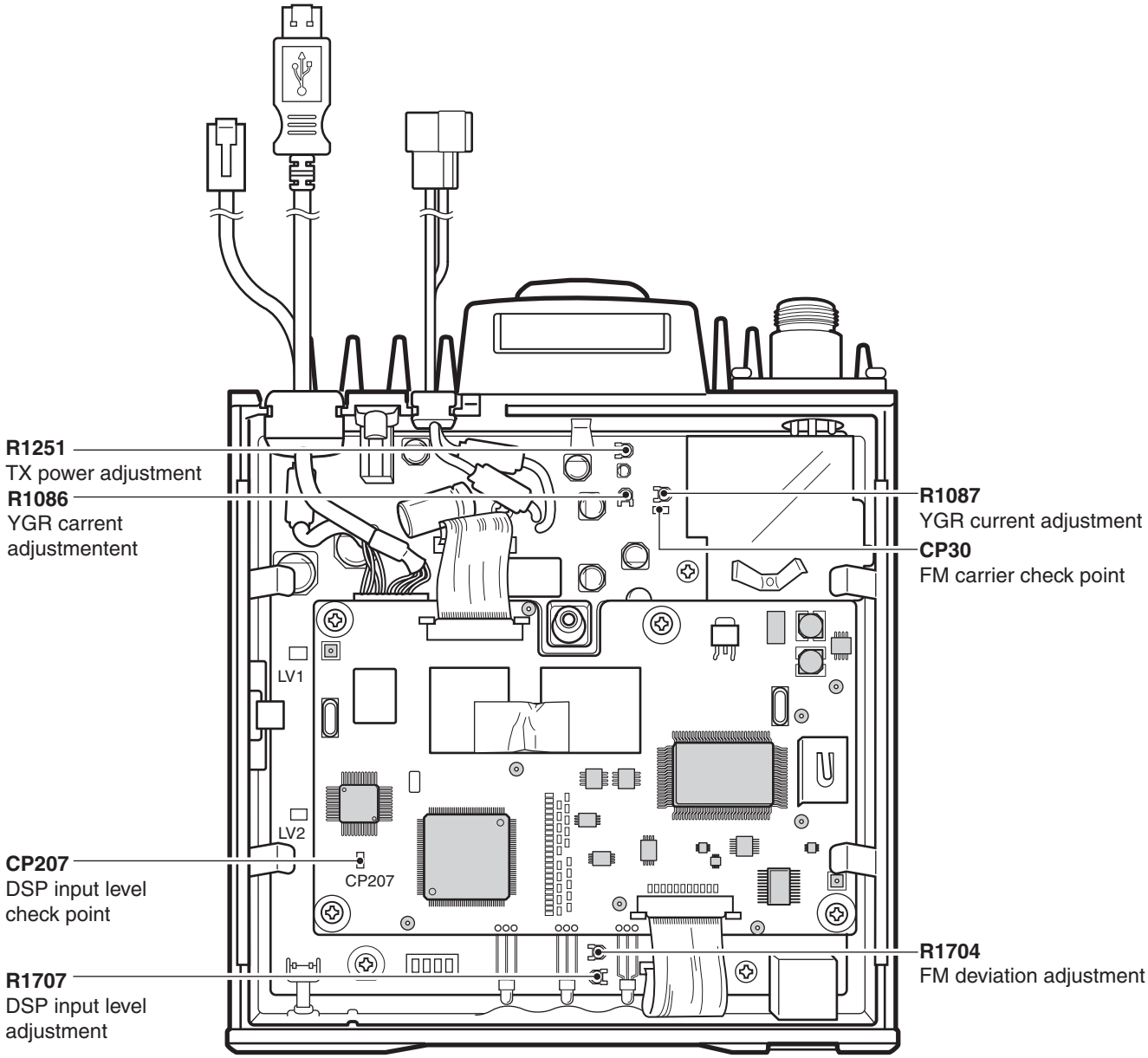

5-4 RECEIVER ADJUSTMENT

ADJUSTMENT ITEM		ADJUSTMENT CONDITION	OPERATION
SQUELCH LEVEL [SQL adjustment /FM thresh]	1	• Operating freq. : 1270.00 MHz • Mode : FM mode • Connect an SSG to the antenna connector and set as: Level : 0.11 µV* (–126 dBm) Modulation : 1 kHz Deviation : 3.5 kHz • Receiving	• Push [ENTER] on the connected computer keyboard to set to "SQL adjustment/FM thresh" level.
[SQL adjustment /FM tight]	2	• Set an SSG as: Level : 0.18 µV* (–122 dBm) • Receiving	• Push [ENTER] on the connected computer keyboard to set to "SQL adjustment/FM tight" level.
AFC CENTER [AFC center voltage adjustment/FM]	1	• Operating freq. : 1270.00 MHz • Mode : FM mode • Connect an SSG to the antenna connector and set as: Level : 1 mV* (–47 dBm) Modulation : OFF • Receiving	• Push [ENTER] on the connected computer's keyboard to set to "AFC center voltage adjustment/FM" level.
[AFC center voltage adjustment /DV]	2	• Mode : DV mode • Receiving	• Push [ENTER] on the connected computer keyboard to set to "AFC center voltage/DV" level.
S-METER (FM) [S-meter adjustment /FM min]	1	• Operating freq. : 1270.00 MHz • Mode : FM mode • Connect an SSG to the antenna connector and set as: Level : 0.18 µV* (–122 dBm) Modulation : OFF • Receiving	• Push [ENTER] on the connected computer keyboard to set to "S-meter adjustment/FM min" level.
[S-meter adjustment /FM full]	2	• Set an SSG as: Level : 5.6 µV* (–92 dBm) • Receiving	• Push [ENTER] on the connected computer keyboard to set to "S-meter adjustment/FM full" level.
S-METER (DV) [S-meter adjustment /DV min]	1	• Operating freq. : 1270.00 MHz • Mode : DV mode • Set an SSG as: Level : 0.18 µV* (–122 dBm) Modulation : OFF • Receiving	• Push [ENTER] on the connected computer keyboard to set to "S-meter adjustment/DV min" level.
[S-meter adjustment /DV full]	2	• Set an SSG as: Level : 5.6 µV* (–92 dBm) • Receiving	• Push [ENTER] on the connected computer keyboard to set to "S-meter adjustment/DV full" level.
S-METER (DD) [S-meter adjustment /DD min]	1	• Operating freq. : 1270.00 MHz • Mode : DD mode • Set an SSG as: Level : 1.6 µV* (–103 dBm) Modulation : OFF • Receiving	• Push [ENTER] on the connected computer keyboard to set to "S-meter adjustment/DD min" level.
[S-meter adjustment /DD full]	2	• Set an SSG as: Level : 5.6 µV* (–92 dBm) • Receiving	• Push [ENTER] on the connected computer keyboard to set to "S-meter adjustment/DD full" level.

*The output level of the standard signal generator (SSG) is indicated as the SSG's open circuit.

SECTION 6 PARTS LIST

[MAIN UNIT]

REF NO.	ORDER NO.	DESCRIPTION	M.	H/V LOCATION
IC71	1110004470	S.IC µPC2721GV-E1	T	45.5/76.4
IC191	1110003490	S.IC TA31136FN (D,EL)	T	46.5/29.9
IC271	1110004070	S.IC MC3356DW-R2	T	81.8/33.5
IC341	1130008090	S.IC BU4066BCFV-E1	T	92.5/35.1
IC342	1130006220	S.IC TC4W53FU (TE12L)	T	106.9/33.8
IC343	1110005290	S.IC NJM2115V-TE1	T	98.2/28.2
IC345	1130004200	S.IC TC4S66F (TE85R)	T	66.3/33.4
IC400	1130010100	S.IC LMX2352TMX	B	25.6/64.8
IC550	1130007610	S.IC µPD3140GS-E1 (DS8)	B	12.7/35
IC551	1130006220	S.IC TC4W53FU (TE12L)	B	21/43.6
IC830	1110006090	S.IC XC6202P502PR	B	38.3/28.2
IC831	1110002750	S.IC TA75S01F (TE85R)	B	62/33.4
IC832	1110004050	S.IC NJM3404AV-TE1	B	57.9/32.6
IC890	1110005410	S.IC RF2485	B	48.5/41.7
IC960	1110005150	S.IC µPC8163TB-E3	B	53.3/61.8
IC1021	1110001890	S.IC µPC1678G-E2	T	68.1/53.9
IC1250	1110002750	S.IC TA75S01F (TE85R)	B	78.9/124.3
IC1251	1110002750	S.IC TA75S01F (TE85R)	B	80.1/116
IC1330	1180002080	S.REG BA09FP-E2	B	75.3/89
IC1331	1180001070	S.IC TA7805F (TE16L)	B	77/100.9
IC1332	1180002020	S.REG BA033FP-E2	B	36.4/96.1
IC1411	1130006220	S.IC TC4W53FU (TE12L)	T	41.4/20.4
IC1460	1110003780	S.IC NJM2902V-TE1	T	41.4/14.6
IC1461	1110003780	S.IC NJM2902V-TE1	B	49.3/8.4
IC1462	1130006220	S.IC TC4W53FU (TE12L)	B	42.1/14.6
IC1463	1130006220	S.IC TC4W53FU (TE12L)	B	59.2/6.2
IC1550	1110003300	S.IC M5282FP 70CD	B	12.2/56
IC1551	1110003090	IC LA4425A	T	2.3/62
IC1670	1130006220	S.IC TC4W53FU (TE12L)	T	84.6/14.1
IC1671	1110004050	S.IC NJM3404AV-TE1	B	80.2/20.3
IC1672	1110005310	S.IC AN6123MS	T	74.7/12.9
IC1673	1130006220	S.IC TC4W53FU (TE12L)	B	75.7/14.6
Q1	1590002940	S.FET NE34018-T1	T	57.3/105.2
Q2	1530003660	S.TR 2SC5454-T1 R54	T	52.2/90.4
Q131	1580000680	S.FET 3SK241-R (TX)	T	41.9/58.9
Q191	1530002600	S.TR 2SC4215-O (TE85R)	T	45.4/35.3
Q192	1530002280	S.TR 2SC4081 T106 S	T	56.7/32.9
Q193	1530002280	S.TR 2SC4081 T106 S	T	59.4/35.7
Q270	1530002600	S.TR 2SC4215-O (TE85R)	T	66.1/41.6
Q271	1530002600	S.TR 2SC4215-O (TE85R)	B	79/42.6
Q272	1590000720	S.TR DTA144EUA T106	T	60.4/41.9
Q341	1590000720	S.TR DTA144EUA T106	T	54.1/11.1
Q342	1590000430	S.TR DTC144EUA T106	T	69.4/32.9
Q400	1530002920	S.TR 2SC4226-T1 R25	T	23.2/52.5
Q470	1540000660	S.TR 2SD2216J-S	T	14.6/74.6
Q471	1530003560	S.TR 2SC5195-T1	T	25.6/73.1
Q472	1530003560	S.TR 2SC5195-T1	T	23.5/73.3
Q473	1530002920	S.TR 2SC4226-T1 R25	T	29.9/67.7
Q474	1530003310	S.TR 2SC5107-O (TE85R)	B	28.9/72.8
Q550	1530002280	S.TR 2SC4081 T106 S	T	25.3/48.5
Q630	1590000430	S.TR DTC144EUA T106	T	8/27.7
Q631	1530002920	S.TR 2SC4226-T1 R25	T	23.7/32.8
Q632	1530002920	S.TR 2SC4226-T1 R25	T	29/30.2
Q633	1530002920	S.TR 2SC4226-T1 R25	B	26.3/29.8
Q634	1540000660	S.TR 2SD2216J-S	T	30.3/35
Q710	1530003310	S.TR 2SC5107-O (TE85R)	B	38.6/73.3
Q770	1590001330	S.TR DTA114EUA T106	B	34.1/58.9
Q771	1530002920	S.TR 2SC4226-T1 R25	T	26.5/39.9
Q890	1530003310	S.TR 2SC5107-O (TE85R)	B	35.3/39.4
Q1080	1560001090	S.FET 2SK2854	B	98.4/39.4
Q1081	1560001140	S.FET 2SK2855 (TE12L)	B	108.6/38.2
Q1082	1540000470	S.TR 2SD1801S-TL	B	76.3/65.4
Q1250	1590000430	S.TR DTC144EUA T106	B	64.7/127.1
Q1330	1590001320	S.TR DTC143ZUA T106	B	63.8/108.7
Q1331	1510000890	S.TR DTA143TU T106	B	63.8/105.3
Q1332	1530002970	S.TR 2SC4684 (TE16R)	B	63.4/98.6
Q1333	1520000730	S.TR 2SB934P (DS) -(TX)	B	76.3/75.5
Q1334	1530002280	S.TR 2SC4081 T106 S	B	63.1/74.7
Q1335	1590000430	S.TR DTC144EUA T106	B	62.8/71.6
Q1336	1540000440	S.TR 2SD1619-T-TD	B	26.6/95.1
Q1337	1510000580	S.TR 2SA1362-GR (TE85R)	B	37/89.7
Q1338	1590000430	S.TR DTC144EUA T106	T	27.5/95.2
Q1340	1590000430	S.TR DTC144EUA T106	T	25/95.2
Q1341	1590000430	S.TR DTC144EUA T106	T	35.4/96.8
Q1342	1510000580	S.TR 2SA1362-GR (TE85R)	B	40.2/87.8
Q1343	1510000580	S.TR 2SA1362-GR (TE85R)	B	42.9/93.8
Q1344	1590000430	S.TR DTC144EUA T106	T	44.6/89.2
Q1345	1590000430	S.TR DTC144EUA T106	B	63.4/57.8
Q1346	1590000430	S.TR DTC144EUA T106	B	63.5/51.9
Q1347	1590000430	S.TR DTC144EUA T106	B	66.1/53.7
Q1348	1510000580	S.TR 2SA1362-GR (TE85R)	B	55.2/55.7
Q1349	1510000580	S.TR 2SA1362-GR (TE85R)	B	60.9/55.4
Q1350	1510000580	S.TR 2SA1362-GR (TE85R)	B	39.9/34.3

[MAIN UNIT]

REF NO.	ORDER NO.	DESCRIPTION	M.	H/V LOCATION
Q1351	1590000430	S.TR DTC144EUA T106	B	35.6/32.9
Q1352	1590000430	S.TR DTC144EUA T106	B	48.2/89.4
Q1460	1530002280	S.TR 2SC4081 T106 S	T	5.9/75.3
Q1550	1560000830	S.FET 2SK2036 (TE85L)	B	10.3/70
Q1600	1540000250	S.TR 2SD999-T2 CK	B	110.1/19.2
Q1603	1530002280	S.TR 2SC4081 T106 S	T	108.6/20.1
Q1670	1590001450	S.FET 2SJ144-GR (TE85R)	T	98.1/16.1
Q1671	1590000430	S.TR DTC144EUA T106	T	96/12.9
Q1673	1530002280	S.TR 2SC4081 T106 S	T	92.8/16.4
Q1750	1520000200	S.TR 2SB798-T2 DK	B	23.2/114.9
Q1751	1530002280	S.TR 2SC4081 T106 S	T	26.5/119.1
Q1800	1590000430	S.TR DTC144EUA T106	T	11/24.8
D131	1790001620	S.DIO 1SV308 (TPL3)	T	39.3/52.9
D192	1750000360	S.DIO 1SS364 (TE85L)	B	49.5/25.5
D193	1750000360	S.DIO 1SS364 (TE85L)	B	56.9/14.7
D194	1750000550	S.DIO 1SS355 TE-17	T	55.3/39.4
D195	1790001560	S.DIO 1SS372 (TE85R)	T	63.3/33.2
D272	1790000490	S.DIO HSM88AS-TR	B	83.7/39.9
D273	1790001620	S.DIO 1SV308 (TPL3)	B	41.1/52.5
D274	1790000490	S.DIO HSM88AS-TR	B	73.9/49.3
D401	1730002260	S.ZEN MA8030-H (TX)	B	22.4/58
D470	1730002360	S.ZEN MA8062-M (TX)	T	14.1/69.1
D471	1720000470	S.VCP 1SV239 (TPH3)	T	20.8/76.9
D630	1720000690	S.VCP 1SV282 (TPH2)	T	13.8/41.3
D631	1720000400	S.VCP 1SV245 (TPH3)	T	16.6/31
D632	1790001260	S.DIO MA2S077-(TX)	T	13.6/35.9
D633	1730002300	S.ZEN MA8082-M (TX)	T	35.3/38.7
D710	1790001620	S.DIO 1SV308 (TPL3)	B	41.8/64.6
D711	1790001620	S.DIO 1SV308 (TPL3)	B	41.5/69.5
D770	1750000580	S.DIO 1SV307 (TPH3)	B	31.2/39.9
D771	1750000580	S.DIO 1SV307 (TPH3)	B	29/44.3
D1080	1730002300	S.ZEN MA8082-M (TX)	B	83.1/67.6
D1160	1750000760	S.DIO MA4PH224	T	90.9/106.4
D1161	1750000760	S.DIO MA4PH224	T	81/108.5
D1162	1750000760	S.DIO MA4PH224	T	77.8/111.5
D1164	1720000360	S.DIO HSU88TRF	T	88.4/121.8
D1165	1720000360	S.DIO HSU88TRF	B	93.1/126.3
D1166	1720000360	S.DIO HSU88TRF	T	95.7/109.5
D1168	1790001040	S.ZEN MA8033-L (TX)	B	64.7/119.1
D1169	1790001040	S.ZEN MA8033-L (TX)	B	64.7/122.4
D1170	1720000360	S.DIO HSU88TRF	T	111.9/118
D1250	1720000360	S.DIO HSU88TRF	T	69.1/124.2
D1251	1720000360	S.DIO HSU88TRF	B	71.6/121.4
D1252	1720000360	S.DIO HSU88TRF	B	74.6/120.2
D1254	1790001260	S.DIO MA2S077-(TX)	B	80/121.3
D1330	1790000700	DIO DSA3A1	T	50.6/120.4
D1331	1750000550	S.DIO 1SS355 TE-17	B	68.1/70.7
D1332	1750000550	S.DIO 1SS355 TE-17	T	27.3/92
D1333	1750000550	S.DIO 1SS355 TE-17	T	29.1/92
D1600	1730002280	S.ZEN MA8091-M (TX)	B	111.9/23.8
D1602	1730002280	S.ZEN MA8091-M (TX)	B	105.9/11
D1604	1750000550	S.DIO 1SS355 TE-17	T	108.2/14.6
D1605	1730002280	S.ZEN MA8091-M (TX)	B	111.9/12.4
D1606	1730002280	S.ZEN MA8091-M (TX)	B	99.7/12.6
D1750	1730002300	S.ZEN MA8082-M (TX)	T	26.4/121.3
D1800	1750000550	S.DIO 1SS355 TE-17	T	13.5/23.2
D1801	1750000550	S.DIO 1SS355 TE-17	T	8.6/22.3
FI1	2040001660	S.FIL LFB431G28SN1A362	T	51.3/100.6
FI2	2040001660	S.FIL LFB431G28SN1A362	T	48.5/86.2
FI71	2040001650	S.SAW WF447B-T	T	47.2/67.9
FI191	2010002440	S.XTL FL-312 (31.05 MHz)	T	45.6/43.1
FI192	2020001920	CER CFWLB450KE1Y-B0	T	61.5/22
FI193	2020001460	CER CFWLA450KHFA-B0	T	64.1/16.3
FI272	2020001160	CER SFELA10M7HA0G-B0	T	59.7/46.2
FI273	2020001160	CER SFELA10M7HA0G-B0	T	68.9/46.2
FI880	2040001650	S.SAW WF447B-T	T	51.2/52.5
FI961	2040001360	S.FIL LFB431G27AL1A303	T	63.6/62.6
FI1020	2040001360	S.FIL LFB431G27AL1A303	T	85/48.4
X191	6070000190	S.DCR CDBCB450KCAY24-R0	T	57.5/28.1
X271	6070000070	DCR CDALA10M7CA004A-B0	T	73.4/35.5
X400	6050010930	S.XTL CR-662 (15.3 MHz)	T	14.3/55.1
L1	6200006030	S.COL LQP18MN4N7C00D	T	66.8/105.6
L2	6200006020	S.COL LQP18MN3N9C00D	T	64.7/108.8
L3	6200006030	S.COL LQP18MN4N7C00D	T	60.5/105.3
L4	6200006060	S.COL LQP18MN8N2C00D	T	59.2/105.3
L5	6200006040	S.COL LQP18MN5N6C00D	T	56.6/102.5
L6	6200006050	S.COL LQP18MN6N8C00D	T	49.4/95.4
L7	6200009950	S.COL LQP18MN3N3C00D	T	55.2/90.6

M.=Mounted side (T: Mounted on the Top side, B: Mounted on the Bottom side)
S.=Surface mount

[MAIN UNIT]

REF NO.	ORDER NO.	DESCRIPTION	M.	H/V LOCATION
L71	6200006990	S.COL ELJRE 56NG-F	T	40.4/78.9
L72	6200006990	S.COL ELJRE 56NG-F	T	47.5/72.2
L73	6200006990	S.COL ELJRE 56NG-F	T	42.3/68.8
L74	6200009350	S.COL ELJRE R22G-F3	T	41.5/61.3
L131	6200002710	S.COL ELJFC 1R8K-F	T	41.8/55.5
L132	6200001980	S.COL NL 252018T-1R0J	T	41.8/52.1
L191	6200002710	S.COL ELJFC 1R8K-F	T	50.6/35.8
L192	6200002000	S.COL NL 252018T-3R3J	T	44.6/48.8
L390	6200006990	S.COL ELJRE 56NG-F	T	31.4/53.4
L391	6200006990	S.COL ELJRE 56NG-F	T	37/51.3
L400	6200006990	S.COL ELJRE 56NG-F	T	9.4/66.9
L404	6200006990	S.COL ELJRE 56NG-F	B	14.9/63.7
L415	6200006990	S.COL ELJRE 56NG-F	T	9.4/49.4
L470	6200006990	S.COL ELJRE 56NG-F	T	23.5/69.5
L471	6200005640	S.COL ELJRE 6N8Z-F	T	25.1/71.2
L472	6200009390	S.COL C3328A-8N0J-A	T	24.6/78.2
L473	6200002630	S.COL NL 252018T-R10J	T	20/79.4
L474	6200005620	S.COL ELJRE 4N7Z-F	T	32.2/67.6
L475	6200005640	S.COL ELJRE 6N8Z-F	T	32.2/70.2
L476	6200005650	S.COL ELJRE 8N2Z-F	T	35.3/73.4
L477	6200005640	S.COL ELJRE 6N8Z-F	T	35.3/77.3
L480	6200005640	S.COL ELJRE 6N8Z-F	B	27.5/74.6
L481	6200006990	S.COL ELJRE 56NG-F	T	14.3/77.8
L550	6200001980	S.COL NL 252018T-1R0J	B	21.7/36.1
L551	6200001980	S.COL NL 252018T-1R0J	T	28.3/51
L552	6200001980	S.COL NL 252018T-1R0J	T	33.8/49.3
L554	6200006990	S.COL ELJRE 56NG-F	B	24.9/37.6
L555	6200009350	S.COL ELJRE R22G-F3	B	23.7/27.5
L556	6200009350	S.COL ELJRE R22G-F3	B	2.5/44.9
L557	6200009350	S.COL ELJRE R22G-F3	T	4/29.7
L630	6200009700	S.COL C6328A-28NG-A	T	17.7/39.1
L631	6200005700	S.COL ELJRE 22NG-F	B	21.4/30.4
L632	6200006990	S.COL ELJRE 56NG-F	T	32.8/30.8
L633	6200001980	S.COL NL 252018T-1R0J	T	17.7/43.9
L634	6200006990	S.COL ELJRE 56NG-F	T	12.4/30.1
L636	6200006990	S.COL ELJRE 56NG-F	T	26.7/33.5
L710	6200006990	S.COL ELJRE 56NG-F	B	38.8/60.3
L712	6200006990	S.COL ELJRE 56NG-F	T	38.4/76.7
L713	6200005620	S.COL ELJRE 4N7Z-F	B	36.8/68.7
L714	6200005640	S.COL ELJRE 6N8Z-F	B	36.4/74.3
L715	6200006990	S.COL ELJRE 56NG-F	B	32.1/77.1
L717	6200006990	S.COL ELJRE 56NG-F	T	9.9/69.5
L718	6200006990	S.COL ELJRE 56NG-F	T	35.3/58.6
L719	6200006990	S.COL ELJRE 56NG-F	T	39/68.7
L720	6200006990	S.COL ELJRE 56NG-F	T	36.2/55.9
L770	6200005700	S.COL ELJRE 22NG-F	B	31/50.4
L880	6200006990	S.COL ELJRE 56NG-F	T	50.6/46.5
L881	6200006990	S.COL ELJRE 56NG-F	T	46.2/53.6
L891	6200005710	S.COL ELJRE 27NG-F	B	40.9/45
L892	6200005720	S.COL ELJRE 33NG-F	T	47.5/58.8
L893	6200005730	S.COL ELJRE 39NG-F	T	47.5/61.4
L895	6200006990	S.COL ELJRE 56NG-F	B	38.2/36.5
L896	6200006990	S.COL ELJRE 56NG-F	B	37.5/38.6
L897	6200006990	S.COL ELJRE 56NG-F	B	42.5/41.2
L898	6200001980	S.COL NL 252018T-1R0J	B	40.7/37.6
L961	6200006990	S.COL ELJRE 56NG-F	B	52.6/64.6
L962	6200005650	S.COL ELJRE 8N2Z-F	B	55.5/61.8
L964	6200006990	S.COL ELJRE 56NG-F	B	43.6/81
L1020	6200006990	S.COL ELJRE 56NG-F	B	69.1/53.7
L1021	6200005660	S.COL ELJRE 10NG-F	T	72.8/53.8
L1080	6200006770	S.COL ELJRE 1N5Z-F	B	100.6/43.6
L1081	6200008180	S.COL 0.25-1.9-10TL 107N	T	112.1/45.6
L1082	6200007740	S.COL LQW2BHN47NJ01L	T	107.3/48.1
L1085	6200006990	S.COL ELJRE 56NG-F	T	106.5/50.4
L1086	6200006990	S.COL ELJRE 56NG-F	T	99.8/46.7
L1087	6200006990	S.COL ELJRE 56NG-F	B	80.9/106.5
L1161	6200009700	S.COL C6328A-28NG-A	T	105.2/95.9
L1162	6200009410	S.COL C3328A-2N5K-A	T	85.1/108.6
L1163	6200009410	S.COL C3328A-2N5K-A	T	73.7/107.3
L1164	6200006990	S.COL ELJRE 56NG-F	B	97.4/127.1
L1166	6200009700	S.COL C6328A-28NG-A	T	93/83.6
L1167	6200008910	S.COL 1812CS-122XKBC	T	101.1/84.8
L1169	6200006990	S.COL ELJRE 56NG-F	T	113.2/69.8
L1170	6200006990	S.COL ELJRE 56NG-F	B	82.7/114
L1250	6200005740	S.COL ELJRE 47NG-F	B	60.8/126.1
L1251	6200006990	S.COL ELJRE 56NG-F	B	76.2/113
L1330	6200006990	S.COL ELJRE 56NG-F	T	21.2/93.5
L1331	6200006990	S.COL ELJRE 56NG-F	B	22.9/92.3
L1332	6200006990	S.COL ELJRE 56NG-F	B	22.5/91
L1333	6200006990	S.COL ELJRE 56NG-F	B	45.2/81
L1334	6200006990	S.COL ELJRE 56NG-F	B	53.9/71.6
L1335	6200006990	S.COL ELJRE 56NG-F	B	62.2/76.6
L1348	6200006990	S.COL ELJRE 56NG-F	B	51.8/67.2
L1349	6200006990	S.COL ELJRE 56NG-F	B	58.7/57.8
L1360	6200006990	S.COL ELJRE 56NG-F	T	37.4/53.2
L1400	6200006990	S.COL ELJRE 56NG-F	T	12.7/48.8
L1401	6200006990	S.COL ELJRE 56NG-F	T	59.4/1.4
L1550	6200006990	S.COL ELJRE 56NG-F	B	17.7/56.8
L1601	6200006990	S.COL ELJRE 56NG-F	T	114.7/13.9
L1602	6200006990	S.COL ELJRE 56NG-F	T	106.4/16.7
L1603	6200006990	S.COL ELJRE 56NG-F	T	106.2/14.3
L1604	6200006990	S.COL ELJRE 56NG-F	T	112.1/11.8

[MAIN UNIT]

REF NO.	ORDER NO.	DESCRIPTION	M.	H/V LOCATION
L1606	6200006990	S.COL ELJRE 56NG-F	B	114.8/10.8
L1607	6200006990	S.COL ELJRE 56NG-F	T	115.8/11.7
L1608	6200006990	S.COL ELJRE 56NG-F	B	95.2/.9
L1609	6200006990	S.COL ELJRE 56NG-F	B	.9/51
L1610	6200006990	S.COL ELJRE 56NG-F	T	105.3/11.8
L1611	6200006990	S.COL ELJRE 56NG-F	B	108.3/6.8
L1612	6200003590	S.COL EXCCL3225U1	B	1.8/80.4
L1613	6200003590	S.COL EXCCL3225U1	B	13.7/124.3
L1614	6200003590	S.COL EXCCL3225U1	B	12.9/129.4
L1801	6200006990	S.COL ELJRE 56NG-F	B	27.4/103.3
L1802	6200006990	S.COL ELJRE 56NG-F	B	26.6/102
L1803	6200006990	S.COL ELJRE 56NG-F	B	26.2/100.7
L1804	6200006990	S.COL ELJRE 56NG-F	B	26.2/99.4
L1805	6200006990	S.COL ELJRE 56NG-F	B	54.5/108.5
R1	7030003320	S.RES ERJ3GEYJ 101 V (100 Ω)	T	55.4/106.3
R2	7030003320	S.RES ERJ3GEYJ 101 V (100 Ω)	T	56.6/98.5
R3	7030003630	S.RES ERJ3GEYJ 393 V (39 kΩ)	T	53.5/93.2
R4	7030003600	S.RES ERJ3GEYJ 223 V (22 kΩ)	T	49.4/92.8
R5	7030003320	S.RES ERJ3GEYJ 101 V (100 Ω)	T	55.2/89.3
R6	7030003320	S.RES ERJ3GEYJ 101 V (100 Ω)	T	55.2/88
R7	7030003340	S.RES ERJ3GEYJ 151 V (150 Ω)	B	47.5/85.1
R8	7030003270	S.RES ERJ3GEYJ 390 V (39 Ω)	B	47.7/83.1
R9	7030003340	S.RES ERJ3GEYJ 151 V (150 Ω)	B	49.6/82.3
R70	7030003200	S.RES ERJ3GEYJ 100 V (10 Ω)	T	40.7/76.6
R71	7030003320	S.RES ERJ3GEYJ 101 V (100 Ω)	T	44.4/73.8
R78	7030003710	S.RES ERJ3GEYJ 184 V (180 kΩ)	T	93.6/27.4
R84	7030003440	S.RES ERJ3GEYJ 102 V (1 kΩ)	T	91/28.7
R85	7030003680	S.RES ERJ3GEYJ 104 V (100 kΩ)	T	95.5/27.4
R87	7030003790	S.RES ERJ3GEYJ 824 V (820 kΩ)	T	98.2/23
R91	7030003430	S.RES ERJ3GEYJ 821 V (820 Ω)	B	105.3/24.9
R92	7030003680	S.RES ERJ3GEYJ 104 V (100 kΩ)	T	95.5/30
R93	7030003560	S.RES ERJ3GEYJ 103 V (10 kΩ)	T	93.6/30
R94	7030003620	S.RES ERJ3GEYJ 333 V (33 kΩ)	T	98.9/33.3
R131	7030003600	S.RES ERJ3GEYJ 223 V (22 kΩ)	T	44.2/61.3
R132	7030003560	S.RES ERJ3GEYJ 103 V (10 kΩ)	T	44.8/60
R133	7030003300	S.RES ERJ3GEYJ 680 V (68 Ω)	T	44.3/56.1
R134	7030003320	S.RES ERJ3GEYJ 101 V (100 Ω)	T	50.9/72.9
R135	7030003440	S.RES ERJ3GEYJ 102 V (1 kΩ)	B	39.1/54.5
R136	7030003440	S.RES ERJ3GEYJ 102 V (1 kΩ)	T	40.2/49.8
R144	7030003520	S.RES ERJ3GEYJ 472 V (4.7 kΩ)	T	37.6/26
R188	7030003320	S.RES ERJ3GEYJ 101 V (100 Ω)	T	58.4/43.8
R189	7030003320	S.RES ERJ3GEYJ 101 V (100 Ω)	T	53.5/13.8
R190	7030003320	S.RES ERJ3GEYJ 101 V (100 Ω)	T	54.8/13.6
R191	7030003680	S.RES ERJ3GEYJ 104 V (100 kΩ)	T	47.9/36.3
R192	7030003460	S.RES ERJ3GEYJ 152 V (1.5 kΩ)	T	44.8/37.5
R193	7030003400	S.RES ERJ3GEYJ 471 V (470 Ω)	T	52.5/36.1
R194	7030003280	S.RES ERJ3GEYJ 470 V (47 Ω)	T	51.8/33.3
R195	7030003450	S.RES ERJ3GEYJ 122 V (1.2 kΩ)	T	52.9/27.9
R196	7030003460	S.RES ERJ3GEYJ 152 V (1.5 kΩ)	T	40.2/32.4
R197	7030003560	S.RES ERJ3GEYJ 103 V (10 kΩ)	T	51.9/18.7
R198	7030003560	S.RES ERJ3GEYJ 103 V (10 kΩ)	T	56.7/15.7
R199	7030003320	S.RES ERJ3GEYJ 101 V (100 Ω)	T	38.3/50.1
R200	7030003560	S.RES ERJ3GEYJ 103 V (10 kΩ)	T	56.7/14.4
R201	7030003570	S.RES ERJ3GEYJ 123 V (12 kΩ)	B	48/27.2
R202	7030003570	S.RES ERJ3GEYJ 123 V (12 kΩ)	B	45.8/24.9
R203	7030003720	S.RES ERJ3GEYJ 224 V (220 kΩ)	T	41/27.9
R204	7030003740	S.RES ERJ3GEYJ 334 V (330 kΩ)	T	39.9/24.7
R205	7030003500	S.RES ERJ3GEYJ 332 V (3.3 kΩ)	T	43.6/23.8
R206	7510001530	S.TMR NTCG20 3NH 103JT	T	42/23.8
R207	7030003680	S.RES ERJ3GEYJ 104 V (100 kΩ)	T	39.9/22.8
R208	7030003600	S.RES ERJ3GEYJ 223 V (22 kΩ)	T	43.2/26
R209	7030003440	S.RES ERJ3GEYJ 102 V (1 kΩ)	T	48.5/25.1
R210	7030003440	S.RES ERJ3GEYJ 102 V (1 kΩ)	T	51.1/26
R211	7030003680	S.RES ERJ3GEYJ 104 V (100 kΩ)	T	50.3/24.1
R212	7030003550	S.RES ERJ3GEYJ 822 V (8.2 kΩ)	T	54.5/34.7
R213	7030003620	S.RES ERJ3GEYJ 333 V (33 kΩ)	T	55.6/36.1
R214	7030003640	S.RES ERJ3GEYJ 473 V (47 kΩ)	T	54.8/32.8
R215	7030003600	S.RES ERJ3GEYJ 223 V (22 kΩ)	T	57.5/35.6
R216	7030003460	S.RES ERJ3GEYJ 152 V (1.5 kΩ)	T	58.9/32.8
R217	7030003320	S.RES ERJ3GEYJ 101 V (100 Ω)	T	54.3/37.7
R218	7030003640	S.RES ERJ3GEYJ 473 V (47 kΩ)	T	62.7/29.9
R219	7030003560	S.RES ERJ3GEYJ 103 V (10 kΩ)	T	57.4/24
R270	7030003490	S.RES ERJ3GEYJ 272 V (2.7 kΩ)	B	82.6/30.5
R271	7030003680	S.RES ERJ3GEYJ 104 V (100 kΩ)	T	78.7/25.6
R272	7030003510	S.RES ERJ3GEYJ 392 V (3.9 kΩ)	B	84.7/31.3
R273	7030003590	S.RES ERJ3GEYJ 183 V (18 kΩ)	B	77.9/33
R274	7030003590	S.RES ERJ3GEYJ 183 V (18 kΩ)	B	80/32.2
R276	7030003450	S.RES ERJ3GEYJ 122 V (1.2 kΩ)	T	71/35.7
R277	7030003280	S.RES ERJ3GEYJ 470 V (47 Ω)	T	74.2/38.3
R278	7030003380	S.RES ERJ3GEYJ 331 V (330 Ω)	T	79.4/40.6
R279	7030003640	S.RES ERJ3GEYJ 473 V (47 kΩ)	T	63.2/41.1
R280	7030003640	S.RES ERJ3GEYJ 473 V (47 kΩ)	T	57.6/41.9
R281	7030003380	S.RES ERJ3GEYJ 331 V (330 Ω)	T	68.1/40.6
R282	7030003570	S.RES ERJ3GEYJ 123 V (12 kΩ)	B	43.7/53.9
R283	7030003640	S.RES ERJ3GEYJ 473 V (47 kΩ)	T	66.5/43.5
R284	7030003320	S.RES ERJ3GEYJ 101 V (100 Ω)	T	69.4/40.6
R285	7030003380	S.RES ERJ3GEYJ 331 V (330 Ω)	B	80.3/46.2
R287	7030003320	S.RES ERJ3GEYJ 101 V (100 Ω)	B	73.9/41.7
R288	7030003360	S.RES ERJ3GEYJ 221 V (220 Ω)	B	75.8/41.3
R289	7030003580	S.RES ERJ3GEYJ 153 V (15 kΩ)	B	77.1/42.1

M.=Mounted side (T: Mounted on the Top side, B: Mounted on the Bottom side)
S.=Surface mount

[MAIN UNIT]

REF NO.	ORDER NO.	DESCRIPTION	M.	H/V LOCATION
R291	7030003680	S.RES ERJ3GEYJ 104 V (100 kΩ)	T	71.3/22.7
R292	7510001670	S.TMR NTCG16 4BH 103KT	T	72.1/40.3
R293	7030003450	S.RES ERJ3GEYJ 122 V (1.2 kΩ)	T	72.1/42.9
R294	7030003370	S.RES ERJ3GEYJ 271 V (270 Ω)	B	46.3/51.8
R295	7030003380	S.RES ERJ3GEYJ 331 V (330 Ω)	T	66.6/46.4
R296	7030005331	S.RES ERA3YED 562V	T	73.4/40.3
R331	7030003770	S.RES ERJ3GEYJ 564 V (560 kΩ)	B	81.6/124.3
R340	7030003520	S.RES ERJ3GEYJ 472 V (4.7 kΩ)	T	66.6/35.7
R394	7030003360	S.RES ERJ3GEYJ 221 V (220 Ω)	T	28.7/53.5
R400	7030003440	S.RES ERJ3GEYJ 102 V (1 kΩ)	B	25.2/54.9
R401	7030003440	S.RES ERJ3GEYJ 102 V (1 kΩ)	B	28.4/56.8
R402	7030003440	S.RES ERJ3GEYJ 102 V (1 kΩ)	B	31.6/68.9
R403	7030003440	S.RES ERJ3GEYJ 102 V (1 kΩ)	B	29.9/58.6
R404	7030003440	S.RES ERJ3GEYJ 102 V (1 kΩ)	B	31.5/59.4
R405	7030003290	S.RES ERJ3GEYJ 560 V (56 Ω)	B	27.9/70.5
R406	7030003460	S.RES ERJ3GEYJ 152 V (1.5 kΩ)	B	18.8/73.4
R407	7030003440	S.RES ERJ3GEYJ 102 V (1 kΩ)	B	20.7/74.3
R409	7030003320	S.RES ERJ3GEYJ 101 V (100 Ω)	T	23/55.7
R410	7030003660	S.RES ERJ3GEYJ 683 V (68 kΩ)	T	23/54.4
R411	7030003440	S.RES ERJ3GEYJ 102 V (1 kΩ)	T	20.8/49.7
R412	7030003670	S.RES ERJ3GEYJ 823 V (82 kΩ)	T	20.4/51.7
R413	7030003360	S.RES ERJ3GEYJ 221 V (220 Ω)	T	21/55
R414	7030003560	S.RES ERJ3GEYJ 103 V (10 kΩ)	T	23/57.1
R415	7030003320	S.RES ERJ3GEYJ 101 V (100 Ω)	T	11/50.7
R416	7030003320	S.RES ERJ3GEYJ 101 V (100 Ω)	T	20.3/57.1
R417	7030003490	S.RES ERJ3GEYJ 272 V (2.7 kΩ)	B	25.2/56.4
R418	7030003490	S.RES ERJ3GEYJ 272 V (2.7 kΩ)	B	27.1/59
R419	7030003490	S.RES ERJ3GEYJ 272 V (2.7 kΩ)	B	31/61.3
R420	7030003460	S.RES ERJ3GEYJ 152 V (1.5 kΩ)	B	32.3/64.5
R421	7030003350	S.RES ERJ3GEYJ 181 V (180 Ω)	T	22/59
R422	7030003440	S.RES ERJ3GEYJ 102 V (1 kΩ)	B	15.4/78.2
R470	7030003360	S.RES ERJ3GEYJ 221 V (220 Ω)	T	14.9/71.5
R471	7030006571	S.RES ERA3YED 392V	T	27.5/74
R472	7030005331	S.RES ERA3YED 562V	T	27.3/76.7
R473	7030005331	S.RES ERA3YED 562V	T	21.2/72.7
R474	7030003400	S.RES ERJ3GEYJ 471 V (470 Ω)	T	21.2/75.3
R475	7030003360	S.RES ERJ3GEYJ 221 V (220 Ω)	T	26.7/67.6
R476	7030003650	S.RES ERJ3GEYJ 563 V (56 kΩ)	T	28/67.6
R478	7030003320	S.RES ERJ3GEYJ 101 V (100 Ω)	T	27.3/69.5
R479	7030003420	S.RES ERJ3GEYJ 681 V (680 Ω)	T	35.4/66.8
R480	7030003370	S.RES ERJ3GEYJ 271 V (270 Ω)	B	36.1/76.5
R481	7030003280	S.RES ERJ3GEYJ 470 V (47 Ω)	T	29.9/75.7
R483	7030003650	S.RES ERJ3GEYJ 563 V (56 kΩ)	B	29.3/74.7
R484	7030003320	S.RES ERJ3GEYJ 101 V (100 Ω)	B	28.7/78.1
R485	7030003240	S.RES ERJ3GEYJ 220 V (22 Ω)	T	31.3/65.7
R486	7030003320	S.RES ERJ3GEYJ 101 V (100 Ω)	T	14.9/72.8
R487	7030007230	S.RES ERA3YED 102V	T	21.9/79
R550	7030003290	S.RES ERJ3GEYJ 560 V (56 Ω)	B	18.2/34.1
R551	7030003440	S.RES ERJ3GEYJ 102 V (1 kΩ)	B	11.1/27.5
R552	7030003440	S.RES ERJ3GEYJ 102 V (1 kΩ)	B	9.5/26.7
R553	7030003440	S.RES ERJ3GEYJ 102 V (1 kΩ)	B	7.9/27.5
R554	7030003440	S.RES ERJ3GEYJ 102 V (1 kΩ)	B	6.3/26.7
R555	7030003440	S.RES ERJ3GEYJ 102 V (1 kΩ)	B	10.1/40.8
R556	7030003460	S.RES ERJ3GEYJ 152 V (1.5 kΩ)	B	7.3/40.8
R557	7030003320	S.RES ERJ3GEYJ 101 V (100 Ω)	B	10.1/42.4
R558	7030003320	S.RES ERJ3GEYJ 101 V (100 Ω)	B	23.3/39.8
R559	7030003450	S.RES ERJ3GEYJ 122 V (1.2 kΩ)	T	8.6/36.7
R560	7030003430	S.RES ERJ3GEYJ 821 V (820 Ω)	T	6.7/34.7
R561	7030003440	S.RES ERJ3GEYJ 102 V (1 kΩ)	T	8.6/34.1
R562	7030003780	S.RES ERJ3GEYJ 684 V (680 kΩ)	T	25.2/50.3
R630	7030003440	S.RES ERJ3GEYJ 102 V (1 kΩ)	T	18.6/32
R631	7030003640	S.RES ERJ3GEYJ 473 V (47 kΩ)	T	15.9/33.2
R632	7030003440	S.RES ERJ3GEYJ 102 V (1 kΩ)	T	20/42.8
R633	7030003560	S.RES ERJ3GEYJ 103 V (10 kΩ)	T	14.1/34
R634	7030003560	S.RES ERJ3GEYJ 103 V (10 kΩ)	T	14.4/37.8
R635	7030003640	S.RES ERJ3GEYJ 473 V (47 kΩ)	T	12.8/34
R636	7030003490	S.RES ERJ3GEYJ 272 V (2.7 kΩ)	T	22.6/35.8
R637	7030003490	S.RES ERJ3GEYJ 272 V (2.7 kΩ)	T	20.9/33.4
R638	7030003420	S.RES ERJ3GEYJ 681 V (680 Ω)	T	21.3/29.6
R639	7030003320	S.RES ERJ3GEYJ 101 V (100 Ω)	T	24.6/35.4
R640	7030003320	S.RES ERJ3GEYJ 101 V (100 Ω)	T	25.9/35.4
R642	7030003650	S.RES ERJ3GEYJ 563 V (56 kΩ)	T	27.1/30.2
R643	7030003290	S.RES ERJ3GEYJ 560 V (56 Ω)	T	28.6/38.2
R644	7030003360	S.RES ERJ3GEYJ 221 V (220 Ω)	B	28.7/35.2
R645	7030003320	S.RES ERJ3GEYJ 101 V (100 Ω)	B	28.7/31
R646	7030003670	S.RES ERJ3GEYJ 823 V (82 kΩ)	B	26.3/31.8
R647	7030003380	S.RES ERJ3GEYJ 331 V (330 Ω)	B	23.8/31.2
R648	7030003320	S.RES ERJ3GEYJ 101 V (100 Ω)	B	25.5/33.9
R649	7030003360	S.RES ERJ3GEYJ 221 V (220 Ω)	T	32/34.8
R650	7030003440	S.RES ERJ3GEYJ 102 V (1 kΩ)	T	18.2/30.1
R651	7030003440	S.RES ERJ3GEYJ 102 V (1 kΩ)	T	13.1/32.1
R710	7030003370	S.RES ERJ3GEYJ 271 V (270 Ω)	B	40.1/61.9
R711	7030003370	S.RES ERJ3GEYJ 271 V (270 Ω)	T	38.4/73.6
R712	7030003340	S.RES ERJ3GEYJ 151 V (150 Ω)	B	42.3/67.7
R715	7030003320	S.RES ERJ3GEYJ 101 V (100 Ω)	B	32.1/79.9
R716	7030003650	S.RES ERJ3GEYJ 563 V (56 kΩ)	B	38.6/75.2
R770	7030003440	S.RES ERJ3GEYJ 102 V (1 kΩ)	B	35.6/34.9
R771	7030003520	S.RES ERJ3GEYJ 472 V (4.7 kΩ)	B	31.5/35.2
R772	7030003440	S.RES ERJ3GEYJ 102 V (1 kΩ)	B	33.6/50.7
R773	7030003520	S.RES ERJ3GEYJ 472 V (4.7 kΩ)	B	31/48.8
R775	7030003270	S.RES ERJ3GEYJ 390 V (39 Ω)	T	36.2/57.2
R777	7030003480	S.RES ERJ3GEYJ 222 V (2.2 kΩ)	T	28.6/43.9

[MAIN UNIT]

REF NO.	ORDER NO.	DESCRIPTION	M.	H/V LOCATION
R778	7030003440	S.RES ERJ3GEYJ 102 V (1 kΩ)	T	26.7/41.8
R779	7030003650	S.RES ERJ3GEYJ 563 V (56 kΩ)	T	26.4/38
R780	7030003320	S.RES ERJ3GEYJ 101 V (100 Ω)	T	24.6/38.9
R781	7030003650	S.RES ERJ3GEYJ 563 V (56 kΩ)	T	26.7/43.1
R830	7030003520	S.RES ERJ3GEYJ 472 V (4.7 kΩ)	B	63/29.8
R831	7030003520	S.RES ERJ3GEYJ 472 V (4.7 kΩ)	B	64.7/33.3
R832	7030003320	S.RES ERJ3GEYJ 101 V (100 Ω)	B	66.5/36.2
R833	7030003320	S.RES ERJ3GEYJ 101 V (100 Ω)	B	56/27.2
R834	7030006091	S.RES ERA3YED 822V	B	58.6/37.5
R835	7030003560	S.RES ERJ3GEYJ 103 V (10 kΩ)	B	57.1/39.1
R836	7030003320	S.RES ERJ3GEYJ 101 V (100 Ω)	B	54.3/35.6
R837	7030006091	S.RES ERA3YED 822V	B	60.5/28.4
R838	7030003560	S.RES ERJ3GEYJ 103 V (10 kΩ)	B	57.9/26.1
R839	7030003320	S.RES ERJ3GEYJ 101 V (100 Ω)	B	44.7/35.5
R842	7030003320	S.RES ERJ3GEYJ 101 V (100 Ω)	B	48.2/35.6
R845	7030003440	S.RES ERJ3GEYJ 102 V (1 kΩ)	B	41.5/30.7
R846	7030003440	S.RES ERJ3GEYJ 102 V (1 kΩ)	B	42.8/29.9
R847	7030003440	S.RES ERJ3GEYJ 102 V (1 kΩ)	B	46.2/32.9
R848	7030003440	S.RES ERJ3GEYJ 102 V (1 kΩ)	B	47.5/32.9
R890	7030003640	S.RES ERJ3GEYJ 473 V (47 kΩ)	B	35.4/37.5
R891	7030003400	S.RES ERJ3GEYJ 471 V (470 Ω)	B	38.1/44.3
R892	7030003400	S.RES ERJ3GEYJ 471 V (470 Ω)	B	35.4/42.6
R893	7030003200	S.RES ERJ3GEYJ 100 V (10 Ω)	B	38.9/42.2
R895	7030003320	S.RES ERJ3GEYJ 101 V (100 Ω)	B	35.6/36.2
R897	7030003290	S.RES ERJ3GEYJ 560 V (56 Ω)	B	44.7/46.8
R898	7030003320	S.RES ERJ3GEYJ 101 V (100 Ω)	B	46.8/35.5
R899	7030003290	S.RES ERJ3GEYJ 560 V (56 Ω)	B	52.9/47.3
R960	7030003370	S.RES ERJ3GEYJ 271 V (270 Ω)	T	60.4/60.6
R961	7030003340	S.RES ERJ3GEYJ 151 V (150 Ω)	B	48.6/64.5
R962	7030003290	S.RES ERJ3GEYJ 560 V (56 Ω)	B	45.6/58.3
R963	7030003370	S.RES ERJ3GEYJ 271 V (270 Ω)	B	55.2/64.6
R964	7030003230	S.RES ERJ3GEYJ 180 V (18 Ω)	B	59.8/63.5
R1020	7030003320	S.RES ERJ3GEYJ 101 V (100 Ω)	B	83.2/121.9
R1022	7030003300	S.RES ERJ3GEYJ 680 V (68 Ω)	T	66.8/58
R1023	7030003430	S.RES ERJ3GEYJ 821 V (820 Ω)	T	78.6/46.6
R1024	7030004030	S.RES ERJ3GEYJ 5R6 V (5.6 Ω)	T	79.4/48.5
R1025	7030003430	S.RES ERJ3GEYJ 821 V (820 Ω)	T	80.2/46.6
R1028	7030003430	S.RES ERJ3GEYJ 821 V (820 Ω)	B	88.6/41
R1029	7030004030	S.RES ERJ3GEYJ 5R6 V (5.6 Ω)	B	89.4/43.1
R1030	7030003430	S.RES ERJ3GEYJ 821 V (820 Ω)	B	90.8/40.9
R1080	7030003360	S.RES ERJ3GEYJ 221 V (220 Ω)	B	94.6/43.9
R1081	7030003460	S.RES ERJ3GEYJ 152 V (1.5 kΩ)	B	93/45.5
R1083	7030003350	S.RES ERJ3GEYJ 181 V (180 Ω)	B	76.3/69.9
R1084	7030003300	S.RES ERJ3GEYJ 680 V (68 Ω)	B	105.1/43.3
R1085	7030003420	S.RES ERJ3GEYJ 681 V (680 Ω)	T	107.3/45.9
R1086	7310005050	S.TRI RH03ADCS3X 4.7k	T	73.9/117.4
R1087	7310005050	S.TRI RH03ADCS3X 4.7k	T	79.9/118.3
R1088	7030003430	S.RES ERJ3GEYJ 821 V (820 Ω)	T	104.6/44
R1090	7030010970	S.RES ERJ1TYJ 151U	B	121.6/53.8
R1091	7030003320	S.RES ERJ3GEYJ 101 V (100 Ω)	T	110.4/69.8
R1160	7030010420	S.RES ERJ1TYJ 560U (56 Ω)	T	106.4/88.2
R1161	7030003520	S.RES ERJ3GEYJ 472 V (4.7 kΩ)	T	86.8/119.1
R1163	7030003560	S.RES ERJ3GEYJ 103 V (10 kΩ)	T	98.6/106.5
R1164	7030000260	S.RES MCR10EZHJ 100 Ω (101)	T	99.8/109.5
R1165	7030003640	S.RES ERJ3GEYJ 473 V (47 kΩ)	B	95/127.9
R1167	7030000340	S.RES MCR10EZHJ 470 Ω (471)	T	105.8/118
R1169	7030000500	S.RES MCR10EZHJ 10 kΩ	B	120.8/126.2
R1170	7030006260	S.RES ERJ12YJ471U (470 Ω)	B	67.7/121.7
R1172	7030000340	S.RES MCR10EZHJ 470 Ω (471)	T	102.3/110.6
R1250	7030003530	S.RES ERJ3GEYJ 562 V (5.6 kΩ)	B	71.6/124.6
R1251	7310005140	S.TRI RH03ADCJ3X 2.2k	T	73.4/126.7
R1252	7030003480	S.RES ERJ3GEYJ 222 V (2.2 kΩ)	T	69.7/127.8
R1254	7030003410	S.RES ERJ3GEYJ 561 V (560 Ω)	B	70.3/127.1
R1255	7030003560	S.RES ERJ3GEYJ 103 V (10 kΩ)	B	75.9/127.1
R1256	7030003600	S.RES ERJ3GEYJ 223 V (22 kΩ)	B	87.6/125.1
R1257	7030003600	S.RES ERJ3GEYJ 223 V (22 kΩ)	B	88.4/127.5
R1258	7030003320	S.RES ERJ3GEYJ 101 V (100 Ω)	B	77.6/121
R1259	7030003320	S.RES ERJ3GEYJ 101 V (100 Ω)	B	77/115.1
R1260	7030003560	S.RES ERJ3GEYJ 103 V (10 kΩ)	B	78/117.5
R1330	7030003200	S.RES ERJ3GEYJ 100 V (10 Ω)	B	64.6/102.8
R1331	7030003440	S.RES ERJ3GEYJ 102 V (1 kΩ)	B	66/104.9
R1332	7030003560	S.RES ERJ3GEYJ 103 V (10 kΩ)	B	65.8/75.5
R1333	7030003440	S.RES ERJ3GEYJ 102 V (1 kΩ)	T	64.1/74.4
R1334	7030000410	S.RES MCR10EZHJ 1.8 kΩ	B	59.5/73.3
R1335	7030000410	S.RES MCR10EZHJ 1.8 kΩ	B	59.5/75.3
R1336	7030007180	S.RES ERJ12YJ150U (15 Ω)	B	71.5/100
R1338	7030003520	S.RES ERJ3GEYJ 472 V (4.7 kΩ)	T	25.7/91.3
R1339	7030000100	S.RES MCR10EZHJ 4.7 Ω (4R7)	B	28.8/98.4
R1340	7030003440	S.RES ERJ3GEYJ 102 V (1 kΩ)	T	25.2/93.2
R1342	7030003560	S.RES ERJ3GEYJ 103 V (10 kΩ)	B	37.1/91.9
R1343	7030003440	S.RES ERJ3GEYJ 102 V (1 kΩ)	T	35.4/94
R1344	7030003560	S.RES ERJ3GEYJ 103 V (10 kΩ)	B	40.2/90.1
R1345	7030003440	S.RES ERJ3GEYJ 102 V (1 kΩ)	T	42.1/90.1
R1346	7030003560	S.RES ERJ3GEYJ 103 V (10 kΩ)	B	42.9/91.1
R1347	7030003440	S.RES ERJ3GEYJ 102 V (1 kΩ)	B	45.7/91.1
R1348	7030003520	S.RES ERJ3GEYJ 472 V (4.7 kΩ)	B	60.6/57.8
R1349	7030003560	S.RES ERJ3GEYJ 103 V (10 kΩ)	B	57.4/55.7
R1350	7030003520	S.RES ERJ3GEYJ 472 V (4.7 kΩ)	B	60.7/53
R1351	7030003560	S.RES ERJ3GEYJ 103 V (10 kΩ)	B	58.7/55.2
R1352	7030003440	S.RES ERJ3GEYJ 102 V (1 kΩ)	B	86.9/37.5
R1353	7030003520	S.RES ERJ3GEYJ 472 V (4.7 kΩ)	B	37.5/33.9
R1411	7030003640	S.RES ERJ3GEYJ 473 V (47 kΩ)	T	48.6/18.8

M.=Mounted side (T: Mounted on the Top side, B: Mounted on the Bottom side)
S.=Surface mount

[MAIN UNIT]

REF NO.	ORDER NO.	DESCRIPTION	M.	H/V LOCATION
R1412	7030003640	S.RES ERJ3GEYJ 473 V (47 kΩ)	T	43.1/18
R1413	7030003320	S.RES ERJ3GEYJ 101 V (100 Ω)	T	40.5/18
R1414	7030003800	S.RES ERJ3GEYJ 105 V (1 MΩ)	T	46.7/19.6
R1415	7030003800	S.RES ERJ3GEYJ 105 V (1 MΩ)	T	45.4/19.6
R1460	7030003670	S.RES ERJ3GEYJ 823 V (82 kΩ)	T	40.5/9.3
R1461	7030003670	S.RES ERJ3GEYJ 823 V (82 kΩ)	T	42.4/8.6
R1462	7030003670	S.RES ERJ3GEYJ 823 V (82 kΩ)	T	45.4/8.7
R1463	7030003690	S.RES ERJ3GEYJ 124 V (120 kΩ)	T	49.4/4.5
R1464	7030003680	S.RES ERJ3GEYJ 104 V (100 kΩ)	T	50.2/6.4
R1465	7030003740	S.RES ERJ3GEYJ 334 V (330 kΩ)	T	54.2/5.2
R1466	7030003700	S.RES ERJ3GEYJ 154 V (150 kΩ)	T	54.1/3.3
R1467	7030003320	S.RES ERJ3GEYJ 101 V (100 Ω)	T	52.8/7
R1468	7030003760	S.RES ERJ3GEYJ 474 V (470 kΩ)	T	51.5/6.4
R1469	7030003320	S.RES ERJ3GEYJ 101 V (100 Ω)	B	39.4/13.5
R1470	7030003560	S.RES ERJ3GEYJ 103 V (10 kΩ)	B	37.8/13.5
R1471	7030003560	S.RES ERJ3GEYJ 103 V (10 kΩ)	B	39.2/6.9
R1472	7030003800	S.RES ERJ3GEYJ 105 V (1 MΩ)	B	40/9.3
R1473	7030003800	S.RES ERJ3GEYJ 105 V (1 MΩ)	B	40/10.9
R1474	7030003570	S.RES ERJ3GEYJ 123 V (12 kΩ)	B	42.4/8.5
R1475	7030003570	S.RES ERJ3GEYJ 123 V (12 kΩ)	B	42.4/5.7
R1476	7030003570	S.RES ERJ3GEYJ 123 V (12 kΩ)	B	44/7.2
R1477	7030003570	S.RES ERJ3GEYJ 123 V (12 kΩ)	B	44/10.1
R1478	7030003670	S.RES ERJ3GEYJ 823 V (82 kΩ)	B	45/17.3
R1479	7030003640	S.RES ERJ3GEYJ 473 V (47 kΩ)	B	49.8/14.1
R1480	7030003520	S.RES ERJ3GEYJ 472 V (4.7 kΩ)	B	55/12.7
R1481	7030003520	S.RES ERJ3GEYJ 472 V (4.7 kΩ)	T	50.6/16.9
R1482	7030003790	S.RES ERJ3GEYJ 824 V (820 kΩ)	B	52.2/13.3
R1483	7030003690	S.RES ERJ3GEYJ 124 V (120 kΩ)	T	35.4/12.4
R1484	7030003640	S.RES ERJ3GEYJ 473 V (47 kΩ)	T	36.7/13.2
R1485	7030003640	S.RES ERJ3GEYJ 473 V (47 kΩ)	T	39.8/11.2
R1486	7030003640	S.RES ERJ3GEYJ 473 V (47 kΩ)	T	42.4/11.2
R1487	7030003650	S.RES ERJ3GEYJ 563 V (56 kΩ)	T	48.6/11.4
R1488	7030003600	S.RES ERJ3GEYJ 223 V (22 kΩ)	T	47.3/17.2
R1489	7030003750	S.RES ERJ3GEYJ 394 V (390 kΩ)	T	47.3/14.6
R1490	7030003320	S.RES ERJ3GEYJ 101 V (100 Ω)	B	60.5/10.7
R1491	7030003800	S.RES ERJ3GEYJ 105 V (1 MΩ)	T	7.5/71.7
R1492	7030003480	S.RES ERJ3GEYJ 222 V (2.2 kΩ)	T	7.5/73
R1493	7030003800	S.RES ERJ3GEYJ 105 V (1 MΩ)	T	7.8/75.3
R1494	7030003560	S.RES ERJ3GEYJ 103 V (10 kΩ)	T	7.1/79.6
R1495	7030003680	S.RES ERJ3GEYJ 104 V (100 kΩ)	B	62.1/10.7
R1496	7030003660	S.RES ERJ3GEYJ 683 V (68 kΩ)	T	39.2/6.7
R1550	7030003640	S.RES ERJ3GEYJ 473 V (47 kΩ)	B	16.5/54.2
R1551	7030003680	S.RES ERJ3GEYJ 104 V (100 kΩ)	B	6/55
R1552	7030003600	S.RES ERJ3GEYJ 223 V (22 kΩ)	T	5.3/62.9
R1553	7030003320	S.RES ERJ3GEYJ 101 V (100 Ω)	B	17.3/59.1
R1555	7030003680	S.RES ERJ3GEYJ 104 V (100 kΩ)	B	13.4/67.2
R1556	7030003510	S.RES ERJ3GEYJ 392 V (3.9 kΩ)	B	11/66.1
R1557	7030003440	S.RES ERJ3GEYJ 102 V (1 kΩ)	B	11/67.4
R1558	7030003440	S.RES ERJ3GEYJ 102 V (1 kΩ)	B	8.5/66.9
R1559	7030003560	S.RES ERJ3GEYJ 103 V (10 kΩ)	B	7.4/73.7
R1560	7030003590	S.RES ERJ3GEYJ 183 V (18 kΩ)	B	8.2/77.4
R1561	7030003400	S.RES ERJ3GEYJ 471 V (470 Ω)	T	16.7/115
R1562	7030007180	S.RES ERJ12YJ150U (15 Ω)	B	42.9/113.9
R1601	7030004050	S.RES ERJ3GEYJ 1R0 V (1 Ω)	B	113.5/18.1
R1602	7030004030	S.RES ERJ3GEYJ 5R6 V (5.6 Ω)	B	106.8/21.5
R1603	7030003390	S.RES ERJ3GEYJ 391 V (390 Ω)	B	106.8/22.8
R1605	7030003320	S.RES ERJ3GEYJ 101 V (100 Ω)	B	101.2/21.6
R1606	7030003560	S.RES ERJ3GEYJ 103 V (10 kΩ)	B	102/17.7
R1607	7030003570	S.RES ERJ3GEYJ 123 V (12 kΩ)	B	102/19.3
R1608	7030003600	S.RES ERJ3GEYJ 223 V (22 kΩ)	T	109.5/17.6
R1609	7030003560	S.RES ERJ3GEYJ 103 V (10 kΩ)	T	110.6/20.3
R1610	7030003480	S.RES ERJ3GEYJ 222 V (2.2 kΩ)	T	108.2/17.6
R1669	7030003680	S.RES ERJ3GEYJ 104 V (100 kΩ)	T	97.9/12.8
R1670	7030003500	S.RES ERJ3GEYJ 332 V (3.3 kΩ)	T	100.6/16.1
R1671	7030005331	S.RES ERA3YED 562V	T	100.6/14.8
R1672	7030003560	S.RES ERJ3GEYJ 103 V (10 kΩ)	T	95.6/14.9
R1674	7030003560	S.RES ERJ3GEYJ 103 V (10 kΩ)	T	5.3/84.8
R1678	7030003680	S.RES ERJ3GEYJ 104 V (100 kΩ)	T	100.6/13.5
R1679	7030003580	S.RES ERJ3GEYJ 153 V (15 kΩ)	T	97/18.9
R1680	7030003680	S.RES ERJ3GEYJ 104 V (100 kΩ)	T	92.8/14.5
R1681	7030003320	S.RES ERJ3GEYJ 101 V (100 Ω)	T	88.9/14.4
R1682	7030003420	S.RES ERJ3GEYJ 681 V (680 Ω)	T	90.8/15.2
R1683	7030003280	S.RES ERJ3GEYJ 470 V (47 Ω)	T	94.4/18.9
R1684	7030003800	S.RES ERJ3GEYJ 105 V (1 MΩ)	T	81.6/15
R1685	7030003800	S.RES ERJ3GEYJ 105 V (1 MΩ)	T	87/15.2
R1686	7030003510	S.RES ERJ3GEYJ 392 V (3.9 kΩ)	B	84.4/13
R1687	7030003750	S.RES ERJ3GEYJ 394 V (390 kΩ)	B	86.4/17
R1688	7030003740	S.RES ERJ3GEYJ 334 V (330 kΩ)	B	82/12.2
R1689	7030003680	S.RES ERJ3GEYJ 104 V (100 kΩ)	B	79.2/12.2
R1690	7030003320	S.RES ERJ3GEYJ 101 V (100 Ω)	B	79.4/10.6
R1691	7030003550	S.RES ERJ3GEYJ 822 V (8.2 kΩ)	B	86.4/13
R1693	7030003650	S.RES ERJ3GEYJ 563 V (56 kΩ)	B	86.8/18.8
R1695	7030003790	S.RES ERJ3GEYJ 824 V (820 kΩ)	B	80.4/13.8
R1696	7030003640	S.RES ERJ3GEYJ 473 V (47 kΩ)	B	84/18.6
R1697	7030003670	S.RES ERJ3GEYJ 823 V (82 kΩ)	B	84.3/24.2
R1698	7030003720	S.RES ERJ3GEYJ 224 V (220 kΩ)	B	84.3/21.5
R1699	7030003670	S.RES ERJ3GEYJ 823 V (82 kΩ)	B	83.4/27.3
R1700	7030003670	S.RES ERJ3GEYJ 823 V (82 kΩ)	B	81/26
R1704	7310005050	S.TRI RH03ADCS3X 4.7k	T	69.4/10.8
R1705	7030003520	S.RES ERJ3GEYJ 472 V (4.7 kΩ)	B	76.4/24.8
R1706	7030003450	S.RES ERJ3GEYJ 122 V (1.2 kΩ)	B	73.6/24.8
R1707	7310002800	S.TRI RH03ADCJ5X 220 k	T	69.4/6.8

[MAIN UNIT]

REF NO.	ORDER NO.	DESCRIPTION	M.	H/V LOCATION
R1708	7030003480	S.RES ERJ3GEYJ 222 V (2.2 kΩ)	T	79/13.1
R1709	7030005331	S.RES ERA3YED 562V	T	79/14.4
R1710	7030003800	S.RES ERJ3GEYJ 105 V (1 MΩ)	T	79/15.7
R1711	7030003320	S.RES ERJ3GEYJ 101 V (100 Ω)	T	72.9/15.2
R1712	7030003320	S.RES ERJ3GEYJ 101 V (100 Ω)	B	73.6/19.9
R1713	7030003750	S.RES ERJ3GEYJ 394 V (390 kΩ)	B	73.6/18.3
R1714	7030003800	S.RES ERJ3GEYJ 105 V (1 MΩ)	B	76.4/18.3
R1715	7030003560	S.RES ERJ3GEYJ 103 V (10 kΩ)	T	6.1/82.8
R1716	7030003680	S.RES ERJ3GEYJ 104 V (100 kΩ)	B	5.6/87.9
R1717	7030003680	S.RES ERJ3GEYJ 104 V (100 kΩ)	B	6.3/85.7
R1718	7030003740	S.RES ERJ3GEYJ 334 V (330 kΩ)		
				[EUR2], [EUR3]
only	B	6.3/83.5		
R1750	7030003680	S.RES ERJ3GEYJ 104 V (100 kΩ)	T	25.3/115.6
R1751	7030003440	S.RES ERJ3GEYJ 102 V (1 kΩ)	T	29.4/121.3
R1800	7030003640	S.RES ERJ3GEYJ 473 V (47 kΩ)	T	9.5/20.2
R1801	7030003600	S.RES ERJ3GEYJ 223 V (22 kΩ)	B	4.2/25.9
R1802	7030003600	S.RES ERJ3GEYJ 223 V (22 kΩ)	T	13.7/24.8
R1803	7030003320	S.RES ERJ3GEYJ 101 V (100 Ω)	T	61.9/6.9
C2	4030009530	S.CER C1608 CH 1H 030B-T	T	67.6/107.5
C3	4030009540	S.CER C1608 CH 1H 1R5B-T	T	65/107.5
C4	4030009540	S.CER C1608 CH 1H 1R5B-T	T	62.4/107.2
C5	4030009510	S.CER C1608 CH 1H 010B-T	T	59.7/107.2
C6	4030007090	S.CER C1608 CH 1H 470J-T	T	54.1/106.3
C7	4030006860	S.CER C1608 JB 1H 102K-T	T	54.3/108.2
C8	4030007010	S.CER C1608 CH 1H 100D-T	T	57.5/108
C9	4030007090	S.CER C1608 CH 1H 470J-T	T	58.8/103.2
C10	4030006860	S.CER C1608 JB 1H 102K-T	T	58.8/101.9
C11	4030007010	S.CER C1608 CH 1H 100D-T	T	58.8/100.6
C12	4030009910	S.CER C1608 CH 1H 040B-T	T	54.8/104.4
C13	4030007090	S.CER C1608 CH 1H 470J-T	T	58.8/99.3
C14	4030007010	S.CER C1608 CH 1H 100D-T	T	58.8/98
C15	4030006860	S.CER C1608 JB 1H 102K-T	T	58.8/96.7
C16	4030006860	S.CER C1608 JB 1H 102K-T	T	51.3/96.2
C17	4030011770	S.CER C1608 CH 1H 060B-T	T	51.3/93.6
C18	4030006860	S.CER C1608 JB 1H 102K-T	T	55.2/91.9
C19	4030006850	S.CER C1608 JB 1H 471K-T	T	57/89.8
C21	4030007010	S.CER C1608 CH 1H 100D-T	T	55.2/86.7
C22	4030009550	S.CER C1608 CH 1H 2R5B-T	T	53.2/87.4
C23	4030006860	S.CER C1608 JB 1H 102K-T	T	48.4/79.5
C70	4030006860	S.CER C1608 JB 1H 102K-T	T	39.9/73.6
C72	4030007050	S.CER C1608 CH 1H 220J-T	T	42.5/73.6
C74	4030007090	S.CER C1608 CH 1H 470J-T	T	43/79.4
C75	4030009500	S.CER C1608 CH 1H 0R5B-T	T	45.5/79.5
C76	4030006860	S.CER C1608 JB 1H 102K-T	T	50.3/78
C77	4030007090	S.CER C1608 CH 1H 470J-T	T	50.3/76.7
C78	4030006860	S.CER C1608 JB 1H 102K-T	T	50.2/75.2
C79	4030009910	S.CER C1608 CH 1H 040B-T	T	49.6/72.9
C80	4030009510	S.CER C1608 CH 1H 010B-T	T	47.5/73.6
C81	4030009550	S.CER C1608 CH 1H 2R5B-T	T	41/68.8
C82	4030009910	S.CER C1608 CH 1H 040B-T	T	42.3/66.1
C131	4030006860	S.CER C1608 JB 1H 102K-T	T	38.9/57.5
C132	4030010760	S.CER C1608 CH 1H 331J-T	T	44.3/54.8
C133	4030006860	S.CER C1608 JB 1H 102K-T	T	44.9/58.7
C134	4030011600	S.CER C1608 JB 1E 104K-T	T	44.7/57.4
C136	4030006860	S.CER C1608 JB 1H 102K-T	T	44.3/53.5
C137	4030006900	S.CER C1608 JB 1H 103K-T	T	44.3/52.2
C138	4030011600	S.CER C1608 JB 1E 104K-T	T	44.3/50.9
C140	4030006860	S.CER C1608 JB 1H 102K-T	T	38.5/55.5
C141	4030007050	S.CER C1608 CH 1H 220J-T	T	41.6/48.5
C191	4030011770	S.CER C1608 CH 1H 060B-T	T	46.9/48.9
C192	4030009540	S.CER C1608 CH 1H 1R5B-T	T	50.3/43.1
C195	4030011600	S.CER C1608 JB 1E 104K-T	T	47.4/34.4
C196	4030006900	S.CER C1608 JB 1H 103K-T	T	39.7/47.9
C197	4030006860	S.CER C1608 JB 1H 102K-T	T	48.7/34.4
C198	4030007120	S.CER C1608 CH 1H 820J-T	T	51.6/29.2
C199	4030006860	S.CER C1608 JB 1H 102K-T	T	47.3/26.4
C200	4550006250	S.TAN TEESVA 1A 106M8L	T	41.4/34.1
C201	4030006850	S.CER C1608 JB 1H 471K-T	T	52.9/31.8
C202	4030011600	S.CER C1608 JB 1E 104K-T	T	40.2/31.1
C203	4030011600	S.CER C1608 JB 1E 104K-T	T	40.2/29.8
C204	4030007160	S.CER C1608 CH 1H 181J-T	T	39.4/27.9
C205	4030007160	S.CER C1608 CH 1H 181J-T	T	40.2/26
C206	4030011600	S.CER C1608 JB 1E 104K-T	B	45/27.3
C207	4030011600	S.CER C1608 JB 1E 104K-T	T	63.2/39.8
C208	4030011600	S.CER C1608 JB 1E 104K-T	B	48.2/29.1
C209	4030006860	S.CER C1608 JB 1H 102K-T	T	45.9/25.1
C210	4030006860	S.CER C1608 JB 1H 102K-T	T	51.9/24.1
C211	4030011810	S.CER C1608 JB 1A 224K-T	T	57.7/38.8
C212	4030006880	S.CER C1608 JB 1H 472K-T	T	60.8/33.6
C213	4030011810	S.CER C1608 JB 1A 224K-T	T	62.7/31.2
C214	4030011600	S.CER C1608 JB 1E 104K-T	T	54.8/24
C215	4030011600	S.CER C1608 JB 1E 104K-T	T	51.9/21.3
C216	4030011600	S.CER C1608 JB 1E 104K-T	T	60.7/15.7
C217	4030011600	S.CER C1608 JB 1E 104K-T	T	61.2/24.2
C218	4030011600	S.CER C1608 JB 1E 104K-T	T	60.7/14.4
C219	4030011600	S.CER C1608 JB 1E 104K-T	T	53.3/15.7
C220	4030011810	S.CER C1608 JB 1A 224K-T	T	52.3/39.4
C271	4030011600	S.CER C1608 JB 1E 104K-T	T	82/41.9
C272	4550006250	S.TAN TEESVA 1A 106M8L	T	82.8/43.6

M.=Mounted side (T: Mounted on the Top side, B: Mounted on the Bottom side)
S.=Surface mount

[MAIN UNIT]

REF NO.	ORDER NO.	DESCRIPTION	M.	H/V LOCATION
C273	4030006900	S.CER C1608 JB 1H 103K-T	T	82/40.6
C274	4030006900	S.CER C1608 JB 1H 103K-T	T	76.3/42.5
C275	4030006900	S.CER C1608 JB 1H 103K-T	T	77.6/42.5
C276	4030006900	S.CER C1608 JB 1H 103K-T	T	76.8/40.6
C277	4030006860	S.CER C1608 JB 1H 102K-T	B	81.9/41.5
C278	4030011600	S.CER C1608 JB 1E 104K-T	T	74/43.1
C279	4030009550	S.CER C1608 CH 1H 2R5B-T	T	69.7/35.7
C281	4030006860	S.CER C1608 JB 1H 102K-T	T	80/25.6
C282	4030007130	S.CER C1608 CH 1H 101J-T	T	77.4/25.6
C283	4030011600	S.CER C1608 JB 1E 104K-T	T	75.5/23.3
C286	4030011600	S.CER C1608 JB 1E 104K-T	B	81.2/43.4
C287	4030006900	S.CER C1608 JB 1H 103K-T	B	78.4/45.4
C288	4030006860	S.CER C1608 JB 1H 102K-T	B	78.9/40.5
C291	4030007140	S.CER C1608 CH 1H 121J-T	B	43.7/51.8
C293	4030011600	S.CER C1608 JB 1E 104K-T	B	45.6/54.7
C295	4030006900	S.CER C1608 JB 1H 103K-T	T	64.1/43
C296	4030011600	S.CER C1608 JB 1E 104K-T	T	66.1/39.7
C297	4030006900	S.CER C1608 JB 1H 103K-T	T	68.9/43.2
C341	4030006860	S.CER C1608 JB 1H 102K-T	T	91/25.5
C342	4030011600	S.CER C1608 JB 1E 104K-T	T	95.9/35.9
C343	4030011600	S.CER C1608 JB 1E 104K-T	T	108/31.4
C344	4030011810	S.CER C1608 JB 1A 224K-T	T	91/27.4
C346	4030011600	S.CER C1608 JB 1E 104K-T	T	102.4/25.9
C347	4510005600	S.ELE ECEV1CS100SR	T	104.8/28.8
C348	4030011600	S.CER C1608 JB 1E 104K-T	T	98.9/35.9
C349	4030011810	S.CER C1608 JB 1A 224K-T	T	91/30
C350	4030017490	S.CER C1608 JB 1A 105K-T	T	67.9/30.5
C390	4030007090	S.CER C1608 CH 1H 470J-T	T	35.7/51.3
C400	4030006900	S.CER C1608 JB 1H 103K-T	B	24.5/58.9
C402	4030007090	S.CER C1608 CH 1H 470J-T	B	23.2/69.5
C403	4030011810	S.CER C1608 JB 1A 224K-T	B	20.5/68.5
C404	4030007090	S.CER C1608 CH 1H 470J-T	B	24.9/70.5
C405	4030006860	S.CER C1608 JB 1H 102K-T	B	26.6/71.8
C406	4550000270	S.TAN TEESVA 1E 474M8L	B	15.8/74.8
C408	4030008880	S.CER C1608 JB 1H 223K-T	B	21.4/70.9
C409	4030008900	S.CER C1608 JB 1H 333K-T	B	19.9/76.1
C410	4030007090	S.CER C1608 CH 1H 470J-T	B	17.3/77.5
C411	4030017490	S.CER C1608 JB 1A 105K-T	T	22/61.6
C412	4030007090	S.CER C1608 CH 1H 470J-T	T	14.5/58.5
C414	4030007090	S.CER C1608 CH 1H 470J-T	B	26.6/57.7
C416	4030007010	S.CER C1608 CH 1H 100D-T	T	12.6/59.6
C417	4030011600	S.CER C1608 JB 1E 104K-T	T	12.6/60.9
C418	4030006880	S.CER C1608 JB 1H 472K-T	T	24.9/55.2
C419	4030017490	S.CER C1608 JB 1A 105K-T	T	14/50.4
C420	4030006880	S.CER C1608 JB 1H 472K-T	B	19.4/60.5
C421	4030007010	S.CER C1608 CH 1H 100D-T	T	19.7/55
C422	4030006880	S.CER C1608 JB 1H 472K-T	T	20.4/53
C423	4030007010	S.CER C1608 CH 1H 100D-T	T	19.5/49.7
C424	4030007090	S.CER C1608 CH 1H 470J-T	B	29.8/69.8
C425	4030007090	S.CER C1608 CH 1H 470J-T	B	33.6/62.6
C426	4030007090	S.CER C1608 CH 1H 470J-T	B	27.1/60.4
C427	4030007090	S.CER C1608 CH 1H 470J-T	B	31/62.6
C429	4030007090	S.CER C1608 CH 1H 470J-T	B	16.5/67.6
C430	4030007090	S.CER C1608 CH 1H 470J-T	T	20.1/61.5
C431	4030007090	S.CER C1608 CH 1H 470J-T	B	20.9/59
C432	4030007090	S.CER C1608 CH 1H 470J-T	T	26.2/56.8
C433	4030006850	S.CER C1608 JB 1H 471K-T	B	31.8/56
C435	4030007090	S.CER C1608 CH 1H 470J-T	T	27.5/57.7
C436	4030007090	S.CER C1608 CH 1H 470J-T	T	23.7/67.1
C437	4030007090	S.CER C1608 CH 1H 470J-T	B	26.7/69.2
C467	4030007090	S.CER C1608 CH 1H 470J-T	B	13.6/77.5
C468	4030007090	S.CER C1608 CH 1H 470J-T	B	11/82
C469	4030007090	S.CER C1608 CH 1H 470J-T	B	12.9/80.3
C470	4030006850	S.CER C1608 JB 1H 471K-T	T	17.2/73.7
C471	4550006760	S.TAN TEESVB21A336M8R	T	16.6/78.5
C472	4030017490	S.CER C1608 JB 1A 105K-T	T	14.8/65.6
C473	4030006850	S.CER C1608 JB 1H 471K-T	T	14.8/66.9
C474	4030011600	S.CER C1608 JB 1E 104K-T	T	18.5/66.4
C475	4030006860	S.CER C1608 JB 1H 102K-T	T	17.2/66.4
C476	4030007090	S.CER C1608 CH 1H 470J-T	T	17.1/70.6
C478	4030009570	S.CER C1608 CH 1H 0R3B-T	T	28.6/76.7
C479	4030009920	S.CER C1608 CH 1H 050B-T	T	27.3/79.3
C480	4030006860	S.CER C1608 JB 1H 102K-T	T	22.7/80.9
C481	4030009530	S.CER C1608 CH 1H 030B-T	T	23.8/75
C482	4030009910	S.CER C1608 CH 1H 040B-T	T	21.2/74
C483	4030006860	S.CER C1608 JB 1H 102K-T	T	21.2/71.4
C484	4030009510	S.CER C1608 CH 1H 010B-T	T	27.5/71.4
C485	4030007090	S.CER C1608 CH 1H 470J-T	T	30.1/70.1
C486	4030007010	S.CER C1608 CH 1H 100D-T	T	30.1/71.4
C488	4030009540	S.CER C1608 CH 1H 1R5B-T	T	35.4/68.1
C489	4030009510	S.CER C1608 CH 1H 010B-T	T	33.5/67.6
C490	4030009530	S.CER C1608 CH 1H 030B-T	T	35.4/69.4
C491	4030009500	S.CER C1608 CH 1H 0R5B-T	T	33.5/70.2
C492	4030009520	S.CER C1608 CH 1H 020B-T	T	34.3/72.1
C493	4030009920	S.CER C1608 CH 1H 050B-T	T	32.2/72.8
C494	4030007020	S.CER C1608 CH 1H 120J-T	T	34.1/74.7
C495	4030009520	S.CER C1608 CH 1H 020B-T	T	32.2/75.4
C496	4030007070	S.CER C1608 CH 1H 330J-T	T	34.1/76
C497	4030009530	S.CER C1608 CH 1H 030B-T	T	33.7/78.6
C498	4030006850	S.CER C1608 JB 1H 471K-T	B	29.9/76
C500	4030006990	S.CER C1608 CH 1H 080D-T	T	29.4/73.1
C501	4030009910	S.CER C1608 CH 1H 040B-T	B	25.6/73.3

[MAIN UNIT]

REF NO.	ORDER NO.	DESCRIPTION	M.	H/V LOCATION
C503	4550006250	S.TAN TEESVA 1A 106M8L	T	18.8/70.3
C504	4030009560	S.CER C1608 CH 1H R75B-T	T	28.6/79.3
C550	4030006860	S.CER C1608 JB 1H 102K-T	B	19/32.2
C551	4030007030	S.CER C1608 CH 1H 150J-T	B	19.2/38.9
C552	4030006860	S.CER C1608 JB 1H 102K-T	B	21.1/38.9
C553	4030007030	S.CER C1608 CH 1H 150J-T	B	17.4/29.6
C554	4030007090	S.CER C1608 CH 1H 470J-T	B	18.2/35.7
C555	4030011600	S.CER C1608 JB 1E 104K-T	B	13.2/40.3
C556	4030007090	S.CER C1608 CH 1H 470J-T	B	26.7/40.2
C558	4030007090	S.CER C1608 CH 1H 470J-T	B	13.2/41.6
C559	4030011600	S.CER C1608 JB 1E 104K-T	B	23.4/42.6
C561	4030007090	S.CER C1608 CH 1H 470J-T	B	27/20.5
C562	4030007090	S.CER C1608 CH 1H 470J-T	B	12.7/27.5
C564	4550000270	S.TAN TEESVA 1E 474M8L	B	5/39.2
C567	4550000520	S.TAN TEESVA 1V 683M8R	B	17.5/40.4
C569	4030006860	S.CER C1608 JB 1H 102K-T	B	17.1/44.8
C570	4030007090	S.CER C1608 CH 1H 470J-T	B	24.7/43.4
C571	4550000530	S.TAN TEESVA 1V 104M8L	B	6.9/34.3
C574	4550003080	S.TAN TEESVA 1A 335M8L	T	5.7/37.8
C575	4030006880	S.CER C1608 JB 1H 472K-T	T	18.2/49.7
C576	4030007010	S.CER C1608 CH 1H 100D-T	T	22.6/50.4
C577	4030006900	S.CER C1608 JB 1H 103K-T	T	27.9/48.5
C578	4030007040	S.CER C1608 CH 1H 180J-T	T	30.5/48.5
C579	4030009520	S.CER C1608 CH 1H 020B-T	T	31.3/50.4
C580	4030007040	S.CER C1608 CH 1H 180J-T	T	31.8/48.5
C581	4030007010	S.CER C1608 CH 1H 100D-T	T	36.3/49
C582	4030007090	S.CER C1608 CH 1H 470J-T	B	7.1/30.3
C583	4030007090	S.CER C1608 CH 1H 470J-T	B	8.4/30.3
C584	4030007090	S.CER C1608 CH 1H 470J-T	B	4.3/28.2
C585	4030007090	S.CER C1608 CH 1H 470J-T	B	25.5/20.5
C586	4030007090	S.CER C1608 CH 1H 470J-T	B	28.3/51.4
C587	4030007090	S.CER C1608 CH 1H 470J-T	B	26.8/44.1
C588	4030007090	S.CER C1608 CH 1H 470J-T	B	26.4/38.9
C630	4030011810	S.CER C1608 JB 1A 224K-T	T	13.7/30.2
C631	4030009570	S.CER C1608 CH 1H 0R3B-T	T	17.8/34
C632	4030007030	S.CER C1608 CH 1H 150J-T	T	15.9/34.8
C634	4030006860	S.CER C1608 JB 1H 102K-T	T	12.8/37.8
C635	4030006860	S.CER C1608 JB 1H 102K-T	T	15/31.3
C637	4030011600	S.CER C1608 JB 1E 104K-T	B	20.6/20.5
C638	4030006860	S.CER C1608 JB 1H 102K-T	T	20.3/34.7
C639	4030007050	S.CER C1608 CH 1H 220J-T	T	21.7/31.5
C640	4030007050	S.CER C1608 CH 1H 220J-T	T	23.8/30.9
C641	4030009500	S.CER C1608 CH 1H 0R5B-T	T	23.9/29.6
C642	4550006250	S.TAN TEESVA 1A 106M8L	T	22.9/39.2
C643	4030011600	S.CER C1608 JB 1E 104K-T	T	20.6/37.6
C644	4030006860	S.CER C1608 JB 1H 102K-T	T	20.6/38.9
C645	4030007010	S.CER C1608 CH 1H 100D-T	T	26.7/32.2
C646	4030011600	S.CER C1608 JB 1E 104K-T	T	30.9/30.2
C647	4030006860	S.CER C1608 JB 1H 102K-T	T	25.8/30.2
C648	4030007090	S.CER C1608 CH 1H 470J-T	T	28.6/33
C649	4030007090	S.CER C1608 CH 1H 470J-T	T	28.6/35.6
C650	4030007090	S.CER C1608 CH 1H 470J-T	B	27.9/33.1
C651	4030007050	S.CER C1608 CH 1H 220J-T	B	23/28.8
C652	4030006860	S.CER C1608 JB 1H 102K-T	B	26.3/27.6
C653	4030007020	S.CER C1608 CH 1H 120J-T	B	20.6/28
C654	4030007020	S.CER C1608 CH 1H 120J-T	B	19/29.6
C655	4030017490	S.CER C1608 JB 1A 105K-T	T	32/32.5
C656	4030006850	S.CER C1608 JB 1H 471K-T	T	33.9/35.5
C657	4550006770	S.TAN TEESVD2 1C 476M-12R	T	31.8/40.6
C658	4030007090	S.CER C1608 CH 1H 470J-T	T	33.9/34.2
C659	4030009530	S.CER C1608 CH 1H 030B-T	B	21.4/32
C660	4030006860	S.CER C1608 JB 1H 102K-T	T	19.5/30.1
C661	4030007090	S.CER C1608 CH 1H 470J-T	T	3.5/23.2
C662	4550006250	S.TAN TEESVA 1A 106M8L	T	5.7/26.7
C710	4030006850	S.CER C1608 JB 1H 471K-T	T	35.6/61
C711	4030007090	S.CER C1608 CH 1H 470J-T	T	38.2/66.6
C712	4030006850	S.CER C1608 JB 1H 471K-T	T	38.4/79.6
C713	4030009520	S.CER C1608 CH 1H 020B-T	B	38.6/68.2
C714	4030009510	S.CER C1608 CH 1H 010B-T	B	35.5/68.7
C715	4030009520	S.CER C1608 CH 1H 020B-T	B	38.6/69.5
C716	4030011770	S.CER C1608 CH 1H 060B-T	B	36.2/71.4
C718	4030007090	S.CER C1608 CH 1H 470J-T	B	34/75.9
C719	4030007030	S.CER C1608 CH 1H 150J-T	B	38.6/76.5
C720	4030006860	S.CER C1608 JB 1H 102K-T	B	37.6/78.1
C721	4030007090	S.CER C1608 CH 1H 470J-T	T	32.5/55.7
C722	4030007090	S.CER C1608 CH 1H 470J-T	B	38.4/64.3
C723	4030007090	S.CER C1608 CH 1H 470J-T	B	38.3/82.1
C770	4030011770	S.CER C1608 CH 1H 060B-T	B	32.3/37.3
C772	4030006860	S.CER C1608 JB 1H 102K-T	B	32.6/33.2
C773	4030006860	S.CER C1608 JB 1H 102K-T	B	34.4/48.8
C774	4030007020	S.CER C1608 CH 1H 120J-T	B	31.8/53.9
C775	4030009530	S.CER C1608 CH 1H 030B-T	B	31/52
C776	4030007020	S.CER C1608 CH 1H 120J-T	B	28.2/50.1
C777	4030006860	S.CER C1608 JB 1H 102K-T	B	29/47.5
C778	4030007090	S.CER C1608 CH 1H 470J-T	T	28.6/41.2
C779	4030006850	S.CER C1608 JB 1H 471K-T	T	24.6/41.5
C780	4030007090	S.CER C1608 CH 1H 470J-T	B	35.7/51.5
C830	4550006080	S.TAN TEESVB2 1C 106M8L	B	36/22.4
C831	4030011600	S.CER C1608 JB 1E 104K-T	B	33.7/21.4
C832	4030011600	S.CER C1608 JB 1E 104K-T	B	38.8/22.8
C833	4550006250	S.TAN TEESVA 1A 106M8L	B	40.5/22.8
C834	4030011600	S.CER C1608 JB 1E 104K-T	B	63/37

M.=Mounted side (T: Mounted on the Top side, B: Mounted on the Bottom side)
S.=Surface mount

[MAIN UNIT]

REF NO.	ORDER NO.	DESCRIPTION	M.	H/V LOCATION
C835	4030011600	S.CER C1608 JB 1E 104K-T	B	52.5/30.5
C836	4550006250	S.TAN TEESVA 1A 106M8L	B	54.5/31.3
C837	4030007130	S.CER C1608 CH 1H 101J-T	B	56/37.5
C838	4030007130	S.CER C1608 CH 1H 101J-T	B	57.9/27.7
C839	4030007030	S.CER C1608 CH 1H 150J-T	B	64.4/37
C840	4030007030	S.CER C1608 CH 1H 150J-T	B	66/33.3
C841	4030007030	S.CER C1608 CH 1H 150J-T	B	49.8/36.2
C880	4030009910	S.CER C1608 CH 1H 040B-T	T	52.5/47
C881	4030009510	S.CER C1608 CH 1H 010B-T	T	50.6/47.8
C882	4030009510	S.CER C1608 CH 1H 010B-T	T	47.5/53.6
C883	4030009910	S.CER C1608 CH 1H 040B-T	T	47.5/56.2
C887	4030007090	S.CER C1608 CH 1H 470J-T	B	34/4.9
C888	4030007090	S.CER C1608 CH 1H 470J-T	B	32.2/4.9
C889	4030007090	S.CER C1608 CH 1H 470J-T	B	30.4/4.9
C890	4030007090	S.CER C1608 CH 1H 470J-T	B	28.6/4.9
C891	4030006850	S.CER C1608 JB 1H 471K-T	B	54.2/44.9
C893	4030007030	S.CER C1608 CH 1H 150J-T	B	45.2/37.4
C894	4030007030	S.CER C1608 CH 1H 150J-T	B	43.1/36.3
C895	4030007030	S.CER C1608 CH 1H 150J-T	B	51.1/36.2
C896	4030007020	S.CER C1608 CH 1H 120J-T	B	42.8/45.2
C897	4030009530	S.CER C1608 CH 1H 030B-T	B	40.9/46.3
C898	4030007020	S.CER C1608 CH 1H 120J-T	B	40.1/48.2
C899	4030006850	S.CER C1608 JB 1H 471K-T	B	35/41.3
C900	4030007090	S.CER C1608 CH 1H 470J-T	B	37.5/41.4
C901	4030006860	S.CER C1608 JB 1H 102K-T	B	53.9/42.4
C902	4030007090	S.CER C1608 CH 1H 470J-T	B	55.2/42.4
C904	4030007020	S.CER C1608 CH 1H 120J-T	T	50.7/58
C905	4030009530	S.CER C1608 CH 1H 030B-T	T	48.8/58.8
C906	4030007050	S.CER C1608 CH 1H 220J-T	T	50.7/60.6
C907	4030009510	S.CER C1608 CH 1H 010B-T	T	48.8/61.4
C908	4030007030	S.CER C1608 CH 1H 150J-T	T	50.7/62.2
C909	4030011600	S.CER C1608 JB 1E 104K-T	B	56.5/42.4
C910	4030007090	S.CER C1608 CH 1H 470J-T	B	61/38.6
C912	4030009910	S.CER C1608 CH 1H 040B-T	B	38.8/38.6
C913	4030007010	S.CER C1608 CH 1H 100D-T	B	33.1/39.4
C961	4030006850	S.CER C1608 JB 1H 471K-T	B	43.3/59.9
C962	4030009510	S.CER C1608 CH 1H 010B-T	B	52.3/58.6
C963	4030009530	S.CER C1608 CH 1H 030B-T	B	49/59.4
C965	4030006850	S.CER C1608 JB 1H 471K-T	B	49.4/62.6
C969	4030006860	S.CER C1608 JB 1H 102K-T	B	56.8/59.2
C970	4030007090	S.CER C1608 CH 1H 470J-T	B	54.7/59.9
C972	4030009510	S.CER C1608 CH 1H 010B-T	B	58.1/62.7
C974	4030006860	S.CER C1608 JB 1H 102K-T	B	53.9/64.6
C977	4030009560	S.CER C1608 CH 1H R75B-T	B	56.5/64.6
C978	4030006850	S.CER C1608 JB 1H 471K-T	B	53.7/66.5
C1022	4030006850	S.CER C1608 JB 1H 471K-T	T	65.5/58
C1023	4030006880	S.CER C1608 JB 1H 472K-T	T	70.7/58
C1024	4030006860	S.CER C1608 JB 1H 102K-T	T	68.1/58
C1025	4030007090	S.CER C1608 CH 1H 470J-T	T	69.4/58
C1026	4030006850	S.CER C1608 JB 1H 471K-T	T	72.8/51.2
C1029	4030011770	S.CER C1608 CH 1H 060B-T	B	92.2/43.1
C1030	4030009920	S.CER C1608 CH 1H 050B-T	B	97/43.1
C1031	4030009530	S.CER C1608 CH 1H 030B-T	B	93/41
C1081	4030007090	S.CER C1608 CH 1H 470J-T	B	97/44.7
C1082	4030007130	S.CER C1608 CH 1H 101J-T	B	97/46.3
C1083	4030007010	S.CER C1608 CH 1H 100D-T	B	96.2/49.9
C1088	4030006860	S.CER C1608 JB 1H 102K-T	T	98.7/51.8
C1090	4030006860	S.CER C1608 JB 1H 102K-T	B	82.8/65.7
C1091	4550003220	S.TAN TEESVA 1E 105M8L	B	84/69.9
C1092	4030006850	S.CER C1608 JB 1H 471K-T	B	66.9/68.4
C1094	4030009520	S.CER C1608 CH 1H 020B-T	B	101.9/38
C1095	4030009910	S.CER C1608 CH 1H 040B-T	B	102.7/39.9
C1096	4030006970	S.CER C1608 CH 1H 060D-T	B	105.1/39.2
C1098	4030009920	S.CER C1608 CH 1H 050B-T	B	107.7/41.9
C1099	4030007130	S.CER C1608 CH 1H 101J-T	T	104.6/45.3
C1100	4030007010	S.CER C1608 CH 1H 100D-T	B	106.5/46.1
C1101	4030007090	S.CER C1608 CH 1H 470J-T	B	105.1/46.1
C1102	4030006900	S.CER C1608 JB 1H 103K-T	T	96.6/49.6
C1105	4030007010	S.CER C1608 CH 1H 100D-T	T	112.1/48.9
C1106	4030007090	S.CER C1608 CH 1H 470J-T	T	110.8/48.9
C1107	4030007130	S.CER C1608 CH 1H 101J-T	T	109.5/48.9
C1108	4030009520	S.CER C1608 CH 1H 020B-T	B	112.1/37.6
C1110	4030011770	S.CER C1608 CH 1H 060B-T	B	110.1/42.7
C1113	4030007090	S.CER C1608 CH 1H 470J-T	B	100.6/47.4
C1114	4030007090	S.CER C1608 CH 1H 470J-T	T	79.9/60.6
C1115	4030011600	S.CER C1608 JB 1E 104K-T	T	79.9/61.9
C1116	4030006850	S.CER C1608 JB 1H 471K-T	B	101.9/47.4
C1118	4030007090	S.CER C1608 CH 1H 470J-T	B	79.2/109.5
C1120	4030011600	S.CER C1608 JB 1E 104K-T	T	95.3/49.6
C1121	4030007090	S.CER C1608 CH 1H 470J-T	T	78.6/121.7
C1123	4030007090	S.CER C1608 CH 1H 470J-T	T	82.8/114.9
C1161	4030006860	S.CER C1608 JB 1H 102K-T	B	112.9/41.6
C1162	4030009520	S.CER C1608 CH 1H 020B-T	B	115.7/41.6
C1167	4030006850	S.CER C1608 JB 1H 471K-T	T	113.2/65.9
C1168	4030007090	S.CER C1608 CH 1H 470J-T	T	113.2/67.2
C1172	4030007090	S.CER C1608 CH 1H 470J-T	T	120.8/87.7
C1173	4030006850	S.CER C1608 JB 1H 471K-T	T	122.1/87.7
C1174	4030006860	S.CER C1608 JB 1H 102K-T	T	119.4/87.7
C1176	4510006220	S.ELE ECEV1CA101UP	T	93.7/91.8
C1186	4030006860	S.CER C1608 JB 1H 102K-T	T	109.1/91.9
C1187	4030007090	S.CER C1608 CH 1H 470J-T	T	110.4/91.9
C1188	4030006850	S.CER C1608 JB 1H 471K-T	T	111.7/91.9

[MAIN UNIT]

REF NO.	ORDER NO.	DESCRIPTION	M.	H/V LOCATION
C1189	4030009510	S.CER C1608 CH 1H 010B-T	T	77.8/107.8
C1191	4030007090	S.CER C1608 CH 1H 470J-T	T	86.8/121.8
C1192	4030007090	S.CER C1608 CH 1H 470J-T	B	91.2/125.9
C1193	4030006850	S.CER C1608 JB 1H 471K-T	B	86.4/119.3
C1196	4030006860	S.CER C1608 JB 1H 102K-T	T	97.3/107.6
C1197	4030000810	S.CER GRM2164C1HR50CD01D	T	104.8/112.3
C1198	4030011030	S.CER GRM31M4C2H1R5CY21L	T	90.9/116.3
C1199	4030017200	S.CER GRM31BR32J102KY01L	T	117.5/121.2
C1200	4030000810	S.CER GRM2164C1HR50CD01D	B	120.8/124.4
C1201	4030006850	S.CER C1608 JB 1H 471K-T	T	111.1/120.2
C1204	4030011070	S.CER GRM31M2C2H5R0CY21L	T	116.1/100.4
C1207	4030000810	S.CER GRM2164C1HR50CD01D	B	114.2/124.4
C1250	4030007010	S.CER C1608 CH 1H 100D-T	T	69.1/121.2
C1251	4030007010	S.CER C1608 CH 1H 100D-T	B	68.3/125.2
C1252	4030006900	S.CER C1608 JB 1H 103K-T	B	73.5/122.8
C1253	4030006850	S.CER C1608 JB 1H 471K-T	B	75/116.4
C1255	4030006850	S.CER C1608 JB 1H 471K-T	B	62.7/127.1
C1256	4030012610	S.CER C2012 JB 1C 474K-T	B	72.8/128.7
C1259	4030007090	S.CER C1608 CH 1H 470J-T	B	50.4/126.8
C1260	4030006850	S.CER C1608 JB 1H 471K-T	T	45.8/112.2
C1261	4030007010	S.CER C1608 CH 1H 100D-T	B	77.9/127.5
C1262	4030007010	S.CER C1608 CH 1H 100D-T	B	86.8/127.5
C1263	4030011600	S.CER C1608 JB 1E 104K-T	B	76.2/124.4
C1264	4510005600	S.ELE ECEV1CS100SR	T	73.5/121.8
C1265	4030006880	S.CER C1608 JB 1H 472K-T	B	83.2/124.3
C1267	4030011600	S.CER C1608 JB 1E 104K-T	B	79.3/113.5
C1268	4030006860	S.CER C1608 JB 1H 102K-T	B	83.2/120
C1269	4030007090	S.CER C1608 CH 1H 470J-T	B	81.3/120.7
C1329	4030007090	S.CER C1608 CH 1H 470J-T	B	67.7/109.5
C1330	4510004600	ELE 16 MV 1000 HC	T	47.3/121.2
C1331	4030006860	S.CER C1608 JB 1H 102K-T	B	56.8/105.6
C1332	4030007090	S.CER C1608 CH 1H 470J-T	B	56.8/104.1
C1333	4510004640	S.ELE ECEV1CA470SP	T	64.5/121.1
C1334	4030006860	S.CER C1608 JB 1H 102K-T	B	67.6/104.9
C1335	4510004640	S.ELE ECEV1CA470SP	T	69.1/97.8
C1336	4030011600	S.CER C1608 JB 1E 104K-T	B	73.9/94.7
C1337	4030011600	S.CER C1608 JB 1E 104K-T	B	76.7/94.7
C1338	4510006220	S.ELE ECEV1CA101UP	T	78.1/92.3
C1339	4030007090	S.CER C1608 CH 1H 470J-T	B	70.4/106.6
C1340	4510004640	S.ELE ECEV1CA470SP	T	68.7/113.5
C1341	4030011600	S.CER C1608 JB 1E 104K-T	B	75.6/108.1
C1342	4030011600	S.CER C1608 JB 1E 104K-T	B	78.4/108.1
C1343	4510006220	S.ELE ECEV1CA101UP	T	77/101.1
C1344	4030007090	S.CER C1608 CH 1H 470J-T	B	62.3/117.3
C1345	4030011600	S.CER C1608 JB 1E 104K-T	B	39.8/100.6
C1346	4030011600	S.CER C1608 JB 1E 104K-T	B	43.5/89.5
C1347	4030007010	S.CER C1608 CH 1H 100D-T	B	56.8/109.7
C1348	4550006760	S.TAN TEESVB21A336M8R	T	42.6/97.2
C1349	4510005600	S.ELE ECEV1CS100SR	T	76.3/84.2
C1350	4030006850	S.CER C1608 JB 1H 471K-T	T	34/87.7
C1351	4030017490	S.CER C1608 JB 1A 105K-T	B	29.6/90.9
C1352	4030012610	S.CER C2012 JB 1C 474K-T	B	37.1/86
C1353	4030006860	S.CER C1608 JB 1H 102K-T	T	31.2/92.9
C1355	4030007090	S.CER C1608 CH 1H 470J-T	T	38.3/94.7
C1356	4030011600	S.CER C1608 JB 1E 104K-T	B	39.3/85.1
C1357	4030011600	S.CER C1608 JB 1E 104K-T	B	42.9/97.3
C1358	4030007090	S.CER C1608 CH 1H 470J-T	B	8.2/92.2
C1359	4030007090	S.CER C1608 CH 1H 470J-T	B	19.1/99.4
C1360	4030007090	S.CER C1608 CH 1H 470J-T	B	20.4/99.8
C1361	4030007090	S.CER C1608 CH 1H 470J-T	T	42.9/86.4
C1362	4030007090	S.CER C1608 CH 1H 470J-T	B	8.8/94.8
C1366	4030006860	S.CER C1608 JB 1H 102K-T	B	27.4/91.7
C1367	4030007090	S.CER C1608 CH 1H 470J-T	B	57.8/65.4
C1368	4030007090	S.CER C1608 CH 1H 470J-T	T	35.4/98.8
C1369	4030007090	S.CER C1608 CH 1H 470J-T	T	25/97.2
C1370	4030007090	S.CER C1608 CH 1H 470J-T	B	51.7/72.4
C1371	4030006860	S.CER C1608 JB 1H 102K-T	B	53.1/85.3
C1372	4030007090	S.CER C1608 CH 1H 470J-T	B	55.5/107.1
C1373	4030007090	S.CER C1608 CH 1H 470J-T	T	62.1/108.8
C1374	4030007090	S.CER C1608 CH 1H 470J-T	B	62.2/115.4
C1375	4030007090	S.CER C1608 CH 1H 470J-T	B	63.8/112.1
C1376	4030007090	S.CER C1608 CH 1H 470J-T	T	58.1/122.8
C1410	4510005600	S.ELE ECEV1CS100SR	T	36.2/20
C1411	4030017490	S.CER C1608 JB 1A 105K-T	T	45.2/22.6
C1412	4030017490	S.CER C1608 JB 1A 105K-T	T	48.5/22.9
C1460	4030006900	S.CER C1608 JB 1H 103K-T	T	41.6/6.7
C1461	4030008870	S.CER C1608 JB 1H 183K-T	T	45.4/7.2
C1462	4030008770	S.CER C1608 JB 1H 562K-T	T	47.3/10.5
C1463	4030011810	S.CER C1608 JB 1A 224K-T	T	47.5/5.3
C1464	4030008910	S.CER C1608 JB 1H 393K-T	T	50.2/2.6
C1465	4510005600	S.ELE ECEV1CS100SR	T	57.9/6.1
C1466	4030006900	S.CER C1608 JB 1H 103K-T	T	55.3/3.3
C1467	4030011280	S.CER C1608 CH 1H 271J-T	T	50.8/9.4
C1468	4030006900	S.CER C1608 JB 1H 103K-T	B	40.8/6.9
C1469	4030008860	S.CER C1608 JB 1H 153K-T	B	44/4.3
C1470	4030006880	S.CER C1608 JB 1H 472K-T	B	45.6/10.1
C1471	4030006870	S.CER C1608 JB 1H 222K-T	B	45.7/6.9
C1472	4030006880	S.CER C1608 JB 1H 472K-T	B	45.8/13.3
C1473	4030008470	S.CER C1608 JB 1H 272K-T	B	45.8/14.9
C1474	4030008470	S.CER C1608 JB 1H 272K-T	B	48.2/14.1
C1475	4030011600	S.CER C1608 JB 1E 104K-T	B	55.7/9.3
C1476	4030010020	S.CER C1608 JB 1H 122K-T	T	39.2/9.3

M.=Mounted side (T: Mounted on the Top side, B: Mounted on the Bottom side)
S.=Surface mount

[MAIN UNIT]

REF NO.	ORDER NO.	DESCRIPTION	M.	H/V LOCATION
C1477	4030006860	S.CER C1608 JB 1H 102K-T	T	35.2/15.5
C1478	4030008470	S.CER C1608 JB 1H 272K-T	T	42.4/9.9
C1479	4030006850	S.CER C1608 JB 1H 471K-T	T	45/11.2
C1480	4030006900	S.CER C1608 JB 1H 103K-T	T	47.3/13.3
C1481	4030006900	S.CER C1608 JB 1H 103K-T	T	49.2/14.1
C1482	4030006900	S.CER C1608 JB 1H 103K-T	T	47.3/15.9
C1483	4030011600	S.CER C1608 JB 1E 104K-T	B	58.2/10.9
C1484	4510005600	S.ELE ECEV1CS100SR	T	59.3/11
C1485	4030011600	S.CER C1608 JB 1E 104K-T	T	5.7/72.5
C1486	4030011600	S.CER C1608 JB 1E 104K-T	T	5.8/78.1
C1487	4030007090	S.CER C1608 CH 1H 470J-T	T	4/20.2
C1488	4030006900	S.CER C1608 JB 1H 103K-T	T	6.1/81.5
C1500	4030007010	S.CER C1608 CH 1H 100D-T	T	118.4/12.8
C1501	4030007010	S.CER C1608 CH 1H 100D-T	B	117.6/10.8
C1502	4030007010	S.CER C1608 CH 1H 100D-T	B	115.2/4.2
C1503	4030007010	S.CER C1608 CH 1H 100D-T	B	117.6/13.2
C1504	4030007010	S.CER C1608 CH 1H 100D-T	B	111.1/4.1
C1505	4030007010	S.CER C1608 CH 1H 100D-T	B	108.3/10.2
C1506	4030007010	S.CER C1608 CH 1H 100D-T	T	105.3/9.5
C1507	4030007090	S.CER C1608 CH 1H 470J-T	B	30.2/23.5
C1509	4030007090	S.CER C1608 CH 1H 470J-T	T	17.3/23.4
C1510	4030007090	S.CER C1608 CH 1H 470J-T	B	50.6/107.2
C1511	4030007090	S.CER C1608 CH 1H 470J-T	B	80.6/5.7
C1512	4030007090	S.CER C1608 CH 1H 470J-T	B	79.5/4.1
C1514	4030007090	S.CER C1608 CH 1H 470J-T	B	81/7.9
C1515	4030007090	S.CER C1608 CH 1H 470J-T	B	83.7/6.8
C1516	4030007090	S.CER C1608 CH 1H 470J-T	T	88.3/10.2
C1517	4030007090	S.CER C1608 CH 1H 470J-T	B	89.5/6.9
C1518	4030007090	S.CER C1608 CH 1H 470J-T	B	91/6.9
C1519	4030007090	S.CER C1608 CH 1H 470J-T	T	93.2/9.3
C1520	4030007090	S.CER C1608 CH 1H 470J-T	B	97.7/12
C1521	4030007090	S.CER C1608 CH 1H 470J-T	T	93.4/2.4
C1522	4030007090	S.CER C1608 CH 1H 470J-T	T	92.1/1.9
C1523	4030007090	S.CER C1608 CH 1H 470J-T	B	91.7/4.1
C1524	4030007090	S.CER C1608 CH 1H 470J-T	T	89.4/2.3
C1525	4030007090	S.CER C1608 CH 1H 470J-T	B	84.4/3.4
C1526	4030007090	S.CER C1608 CH 1H 470J-T	T	83.2/1
C1527	4030007090	S.CER C1608 CH 1H 470J-T	T	65.6/6.2
C1529	4030007010	S.CER C1608 CH 1H 100D-T	T	103.5/9.7
C1548	4030007090	S.CER C1608 CH 1H 470J-T	T	6.5/88.1
C1549	4030007090	S.CER C1608 CH 1H 470J-T	B	1.7/53.2
C1550	4550006250	S.TAN TEESVA 1A 106M8L	T	4.8/50.2
C1551	4030007170	S.CER C1608 CH 1H 221J-T	B	7.6/55
C1552	4550006250	S.TAN TEESVA 1A 106M8L	T	5.3/59.1
C1553	4550006300	S.TAN ECST1AY475R	B	4/55.8
C1554	4510005600	S.ELE ECEV1CS100SR	T	4.8/54.1
C1555	4550006250	S.TAN TEESVA 1A 106M8L	T	9.4/61.7
C1556	4030011600	S.CER C1608 JB 1E 104K-T	B	12/62.9
C1557	4030017490	S.CER C1608 JB 1A 105K-T	B	7.4/75.3
C1558	4030008920	S.CER C1608 JB 1H 473K-T	B	7.1/66.9
C1559	4030017490	S.CER C1608 JB 1A 105K-T	B	7.7/63.9
C1560	4510006670	S.ELE ECEV1CA471P	T	6.2/99.2
C1561	4030011600	S.CER C1608 JB 1E 104K-T	B	1.8/74.8
C1562	4510006670	S.ELE ECEV1CA471P	T	21.6/105.6
C1563	4030007090	S.CER C1608 CH 1H 470J-T	B	7.4/72.2
C1564	4030007090	S.CER C1608 CH 1H 470J-T	B	1.8/76.4
C1565	4030007090	S.CER C1608 CH 1H 470J-T	B	19.6/57.3
C1566	4030007090	S.CER C1608 CH 1H 470J-T	B	3.3/98.5
C1567	4030007090	S.CER C1608 CH 1H 470J-T	B	4.6/62.8
C1568	4030007090	S.CER C1608 CH 1H 470J-T	T	8.2/52.1
C1569	4030007090	S.CER C1608 CH 1H 470J-T	B	14.4/121.7
C1571	4030007090	S.CER C1608 CH 1H 470J-T	T	13.9/101.5
C1572	4030006860	S.CER C1608 JB 1H 102K-T	T	7.9/55.5
C1600	4030007090	S.CER C1608 CH 1H 470J-T	T	4.4/21.6
C1601	4030007090	S.CER C1608 CH 1H 470J-T	B	3.3/20
C1602	4030007090	S.CER C1608 CH 1H 470J-T	T	20.9/15.5
C1603	4030007090	S.CER C1608 CH 1H 470J-T	T	22.4/15.5
C1604	4030007090	S.CER C1608 CH 1H 470J-T	B	39.7/2.2
C1605	4030007090	S.CER C1608 CH 1H 470J-T	B	67.2/1.7
C1607	4030011600	S.CER C1608 JB 1E 104K-T	B	110.1/23.6
C1608	4510005600	S.ELE ECEV1CS100SR	T	108.6/27.3
C1609	4030006860	S.CER C1608 JB 1H 102K-T	T	102.1/19.8
C1610	4510005600	S.ELE ECEV1CS100SR	T	102/22.4
C1611	4030006860	S.CER C1608 JB 1H 102K-T	T	111.1/15.8
C1612	4030006860	S.CER C1608 JB 1H 102K-T	B	110.2/12.1
C1613	4030006860	S.CER C1608 JB 1H 102K-T	B	103.5/12
C1614	4030006860	S.CER C1608 JB 1H 102K-T	T	110.3/13.6
C1615	4030006850	S.CER C1608 JB 1H 471K-T	T	111.9/20.3
C1617	4030007090	S.CER C1608 CH 1H 470J-T	T	99.2/11
C1619	4030006850	S.CER C1608 JB 1H 471K-T	T	108.7/22
C1620	4030006850	S.CER C1608 JB 1H 471K-T	B	104.2/22.8
C1621	4030006850	S.CER C1608 JB 1H 471K-T	B	14.2/1.7
C1622	4550006920	S.TAN TEESVB2 1E 335M-8R	B	106.1/15.5
C1623	4550006920	S.TAN TEESVB2 1E 335M-8R	B	116.7/24.1
C1624	4030007090	S.CER C1608 CH 1H 470J-T	T	28.9/16.6
C1625	4030007090	S.CER C1608 CH 1H 470J-T	T	30.2/16.6
C1626	4030007090	S.CER C1608 CH 1H 470J-T	T	31.5/16.6
C1669	4030007090	S.CER C1608 CH 1H 470J-T	T	93.2/11.9
C1670	4030017490	S.CER C1608 JB 1A 105K-T	T	102.1/18.2
C1672	4030011600	S.CER C1608 JB 1E 104K-T	T	95.6/16.2
C1673	4030006860	S.CER C1608 JB 1H 102K-T	T	95.7/18.9
C1674	4030011810	S.CER C1608 JB 1A 224K-T	T	88.9/16

[MAIN UNIT]

REF NO.	ORDER NO.	DESCRIPTION	M.	H/V LOCATION
C1675	4550006760	S.TAN TEESVB21A336M8R	T	92/20.5
C1676	4510005600	S.ELE ECEV1CS100SR	T	88.4/19.7
C1677	4030008850	S.CER C1608 JB 1H 123K-T	B	83.6/15.4
C1678	4510005600	S.ELE ECEV1CS100SR	T	84.6/20.2
C1679	4030007020	S.CER C1608 CH 1H 120J-T	B	80.4/15.4
C1680	4030017490	S.CER C1608 JB 1A 105K-T	B	86.2/21.5
C1681	4030009490	S.CER C1608 JB 1H 821K-T	B	86.2/27.3
C1682	4030008470	S.CER C1608 JB 1H 272K-T	B	79.4/26
C1683	4030007120	S.CER C1608 CH 1H 820J-T	B	83.4/25.8
C1684	4030008890	S.CER C1608 JB 1H 273K-T	B	87.7/10.6
C1685	4510005600	S.ELE ECEV1CS100SR	T	80.8/19.7
C1686	4030011600	S.CER C1608 JB 1E 104K-T	B	88.9/21.5
C1687	4550006250	S.TAN TEESVA 1A 106M8L	B	72.6/14.2
C1688	4030011600	S.CER C1608 JB 1E 104K-T	T	81.6/13.1
C1689	4030011600	S.CER C1608 JB 1E 104K-T	T	77.1/12.5
C1690	4030011600	S.CER C1608 JB 1E 104K-T	T	73.7/9.3
C1691	4550006250	S.TAN TEESVA 1A 106M8L	T	76.7/17.2
C1692	4510005600	S.ELE ECEV1CS100SR	T	73.7/18.4
C1693	4550006250	S.TAN TEESVA 1A 106M8L	T	69.3/3.9
C1694	4030011600	S.CER C1608 JB 1E 104K-T	B	76.4/19.9
C1695	4030008890	S.CER C1608 JB 1H 273K-T	B	89.8/3
C1696	4030011600	S.CER C1608 JB 1E 104K-T	T	1.6/11.4
C1697	4030007090	S.CER C1608 CH 1H 470J-T	T	40.2/2.5
C1698	4030007090	S.CER C1608 CH 1H 470J-T	T	1.6/12.6
C1699	4030007090	S.CER C1608 CH 1H 470J-T	T	25/1.7
C1700	4030007090	S.CER C1608 CH 1H 470J-T	B	5.4/91.6
C1750	4030006900	S.CER C1608 JB 1H 103K-T	T	27.9/12.2
C1751	4030006850	S.CER C1608 JB 1H 471K-T	T	54.5/123.7
C1752	4030006900	S.CER C1608 JB 1H 103K-T	T	28.6/119.3
C1753	4030006860	S.CER C1608 JB 1H 102K-T	T	24.2/120.5
C1754	4510004640	S.ELE ECEV1CA470SP	T	31.8/127.5
C1755	4030007090	S.CER C1608 CH 1H 470J-T	T	25.8/113.2
C1800	4030007090	S.CER C1608 CH 1H 470J-T	B	24/20.5
C1801	4030006900	S.CER C1608 JB 1H 103K-T	T	42/103.6
C1802	4030006900	S.CER C1608 JB 1H 103K-T	T	42.5/112.3
C1803	4030006850	S.CER C1608 JB 1H 471K-T	T	28.6/104.1
C1804	4030006850	S.CER C1608 JB 1H 471K-T	T	32.4/103.3
C1805	4030006850	S.CER C1608 JB 1H 471K-T	T	27.8/101.5
C1806	4030006850	S.CER C1608 JB 1H 471K-T	T	32.4/99.7
C1807	4030006850	S.CER C1608 JB 1H 471K-T	T	42/101.4
C1808	4030007090	S.CER C1608 CH 1H 470J-T	T	38.8/112
J1550	6450001440	CNR HSJ1403-01-010	T	18.9/124.7
J1600	6510016480	CNR 52018-8845	T	113.7/4
J1602	6510021970	S.CNR AXN330C130P	T	26.2/21.8
J1750	6510009350	CNR B2B-ZR	T	25.4/125.5
J1800	6510021720	S.CNR 30FLT-SM1-TB	T	44/107.5
J1801	6510021720	S.CNR 30FLT-SM1-TB	T	87/5.8
S1601	2260002590	SW SKHHLU	T	8.7/5.9
W11	7030008240	S.RES ERJ12YJ0R00U	T	78.2/78.7
W296	7030003860	S.RES ERJ3GE JPW V	T	71/38.3
W340	7030003860	S.RES ERJ3GE JPW V	B	67.1/9.8
W404	7030003860	S.RES ERJ3GE JPW V	T	17.5/59.6
W428	7030003860	S.RES ERJ3GE JPW V	B	13.6/94.8
W429	7030003860	S.RES ERJ3GE JPW V	B	33.6/61.3
W480	7030003860	S.RES ERJ3GE JPW V	T	20.5/69.2
W550	7030003860	S.RES ERJ3GE JPW V	B	26/42.3
W700	7030003860	S.RES ERJ3GE JPW V	T	39/70.7
W840	7030003860	S.RES ERJ3GE JPW V	B	49.8/33.6
W841	7030003860	S.RES ERJ3GE JPW V	B	42.5/39.9
W896	7030000010	S.RES MCR10EZHJ JPW (000)	B	42.4/85.8
W1021	7030003860	S.RES ERJ3GE JPW V	T	66.8/60.6
W1022	7030003860	S.RES ERJ3GE JPW V	T	33.3/53.5
W1026	7030003860	S.RES ERJ3GE JPW V	T	18.1/26
W1029	7030008240	S.RES ERJ12YJ0R00U	B	68.9/113
W1030	7030000010	S.RES MCR10EZHJ JPW (000)	B	112.2/1.7
W1032	7030000010	S.RES MCR10EZHJ JPW (000)	B	98.3/33.6
W1033	7030008240	S.RES ERJ12YJ0R00U	B	21.6/53.5
W1083	7030003860	S.RES ERJ3GE JPW V	B	104.3/41.2
W1084	7030003860	S.RES ERJ3GE JPW V	B	101.9/42
W1089	7030003860	S.RES ERJ3GE JPW V	T	81.6/114.1
W1161	7030003860	S.RES ERJ3GE JPW V	T	36.1/23.8
W1164	7120000490	JMP ERD25T0	B	86.4/116.7
W1166	7030003860	S.RES ERJ3GE JPW V	T	111.1/125.4
W1261	7030003860	S.RES ERJ3GE JPW V	B	73.1/127.1
W1262	7030003860	S.RES ERJ3GE JPW V	T	69.7/126.5
W1330	8900011960	CBL OPC-1216		
W1601	7030003860	S.RES ERJ3GE JPW V	T	86.8/23.9
W1670	7030003860	S.RES ERJ3GE JPW V	B	86/7.3
W1701	7030003860	S.RES ERJ3GE JPW V	B	76.4/23.1
W1750	7030003860	S.RES ERJ3GE JPW V	B	88/5
EP5	6910000630	BEA FSRH070140RN000B		
EP6	6910000630	BEA FSRH070140RN000B		
EP271	6910012350	S.BEA MMZ1608Y 102BT	T	74.9/41.2
EP401	6910012350	S.BEA MMZ1608Y 102BT	B	16.5/70.2

M.=Mounted side (T: Mounted on the Top side, B: Mounted on the Bottom side)
S.=Surface mount

[MAIN UNIT]

REF NO.	ORDER NO.	DESCRIPTION	M.	H/V LOCATION
EP403	6910012350	S.BEA MMZ1608Y 102BT	B	20.8/63
EP404	6910012350	S.BEA MMZ1608Y 102BT	T	14.4/60.4
EP405	6910012350	S.BEA MMZ1608Y 102BT	T	21.3/66.3
EP470	6910012350	S.BEA MMZ1608Y 102BT	T	16.4/68.2
EP482	6910012350	S.BEA MMZ1608Y 102BT	B	12.9/82.8
EP550	6910012350	S.BEA MMZ1608Y 102BT	B	24.6/39.8
EP551	6910012350	S.BEA MMZ1608Y 102BT	B	35.1/26.6
EP552	6910012350	S.BEA MMZ1608Y 102BT	B	27.1/48.7
EP553	6910012350	S.BEA MMZ1608Y 102BT	B	18/48.1
EP721	6910012350	S.BEA MMZ1608Y 102BT	B	32.1/85.5
EP1601	6910014690	S.BEA MPZ1608S221A-T	T	114.3/16.4
EP1602	6910014690	S.BEA MPZ1608S221A-T	T	105.3/18.2
EP1603	6910014690	S.BEA MPZ1608S221A-T	T	104.4/14
EP1604	6910014690	S.BEA MPZ1608S221A-T	T	109/12.4
EP1606	6910014690	S.BEA MPZ1608S221A-T	B	114.3/12.3
EP1607	6910014690	S.BEA MPZ1608S221A-T	T	113.4/13.9
EP1608	6910014690	S.BEA MPZ1608S221A-T	T	102.7/11.8
EP1609	6910014690	S.BEA MPZ1608S221A-T	B	107.4/8.6
EP1750	6910012350	S.BEA MMZ1608Y 102BT	B	27.8/124
EP1751	6910012350	S.BEA MMZ1608Y 102BT	B	27.8/125.5

[LOGIC-1 UNIT]

REF NO.	ORDER NO.	DESCRIPTION	M.	H/V LOCATION
IC1	1130010030	S.IC µPD9930G-22	T	8.5/32.4
IC2	1130010920	S.IC AMBE-2020	T	31.8/51
IC3	1130006890	S.IC TC7S04FU (TE85R)	B	30.7/46.1
IC4	1180002370	S.REG R1111N321B-TR	T	33.2/38.7
IC50	1140010090	S.IC µPD70F3102AGJ-33-8EU	T	61.6/54
IC51	1130007280	S.IC TC7S32FU (TE85R)	T	45.3/65.2
IC52	1110005730	S.IC S-80928CNMC-G8Y-T2	B	54.3/42.2
IC53	1130007110	S.IC TC7W04FU (TE12L)	T	44.6/62.1
IC54	1140008650	S.IC HN58X2464TI	T	45.2/56.4
IC55	1130010630	S.IC SN74AHCT541PWR	B	43/36.3
IC56	1190001340	S.IC M62334FP 600C	T	59.8/37.1
IC57	1190001340	S.IC M62334FP 600C	T	68.2/37
IC58	1110002860	S.IC TA75S393F (TE85R)	B	4/48.1
IC100	1130010620	S.IC SN74AHC541PWR	B	109.6/49.6
IC101	1130007110	S.IC TC7W04FU (TE12L)	T	106.1/56.2
IC102	1130008710	S.IC TC7SET04FU (TE85L)	T	110.9/55.3
IC103	1130010630	S.IC SN74AHCT541PWR	T	108.9/49.3
IC104	1120002840	S.IC RTL8019AS	T	87.7/39.1
IC105	1130010580	S.IC µPD43256BGW-70LL-9JL	T	108.7/37.2
IC150	1110005430	S.IC CMX589AD5	T	98.2/11.4
IC151	1130008710	S.IC TC7SET04FU (TE85L)	T	89.1/16.9
IC152	1130004200	S.IC TC4S66F (TE85R)	B	103.9/7.5
IC153	1130004200	S.IC TC4S66F (TE85R)	B	100.9/13
IC200	1120002870	S.IC XCS20XL-4TQ144I	T	32.1/18.9
IC201	1130006890	S.IC TC7S04FU (TE85R)	B	36.5/54.2
IC202	1130008360	S.IC TC7SHU04FU (TE85L)	T	25.6/32.9
IC203	1130006890	S.IC TC7S04FU (TE85R)	B	35.4/31.1
IC300	1110005290	S.IC NJM2115V-TE1	T	58.6/19.4
IC301	1110005290	S.IC NJM2115V-TE1	T	57.2/30.5
IC302	1110005290	S.IC NJM2115V-TE1	T	68.4/20.7
IC350	1130006220	S.IC TC4W53FU (TE12L)	T	84.4/19.1
IC351	1110003780	S.IC NJM2902V-TE1	T	90.6/23.1
IC352	1130006220	S.IC TC4W53FU (TE12L)	T	81.2/23.6
IC353	1130008560	S.IC TC75S51F (TE85L)	T	100.8/23.8
IC354	1130006220	S.IC TC4W53FU (TE12L)	T	104.8/18.8
IC355	1110002750	S.IC TA75S01F (TE85R)	B	87.5/17.5
IC500	1180001070	S.IC TA7805F (TE16L)	T	86.3/73.9
IC502	1180002390	S.REG S-812C33AMC-C2N-T2	T	92.8/66
IC503	1110005440	S.IC NJM2374AM-TE1	T	110.5/70.6
IC504	1180002390	S.REG S-812C33AMC-C2N-T2	T	64.3/74.8
IC550	1130010570	S.IC FT8U232AM	T	11.8/61.4
IC551	1130009570	S.IC BR93LC46F-WE2	T	12.8/52.2
IC552	1110005820	S.IC R3112N281A-TR	T	20.9/60
IC553	1130007280	S.IC TC7S32FU (TE85R)	B	10.4/49
Q50	1530002280	S.TR 2SC4081 T106 S	B	8.3/43.6
Q51	1510000770	S.TR 2SA1586-GR (TE85R)	B	5.7/43.9
Q52	1590000430	S.TR DTC144EUA T106	B	7.9/47.6
Q100	1590000430	S.TR DTC144EUA T106	T	79/26.4
Q101	1590001980	S.TR XP4315 (TX)	B	42/7.9
Q102	1590001980	S.TR XP4315 (TX)	B	39.5/7.9
Q103	1590000430	S.TR DTC144EUA T106	B	67.7/6.4
Q150	1590001400	S.TR XP1214 (TX)	T	91.3/12.8
Q151	1590001400	S.TR XP1214 (TX)	B	97.2/6.4
Q153	1590000430	S.TR DTC144EUA T106	B	76.3/24.3
Q154	1590000430	S.TR DTC144EUA T106	B	106.3/12.5
Q155	1590000430	S.TR DTC144EUA T106	B	74.5/20.6
Q156	1590000430	S.TR DTC144EUA T106	B	72/22.4
Q400	1590000430	S.TR DTC144EUA T106	B	73.3/14.4
Q500	1520000200	S.TR 2SB798-T2 DK	T	80.3/63.6

[LOGIC-1 UNIT]

REF NO.	ORDER NO.	DESCRIPTION	M.	H/V LOCATION
Q501	1590000430	S.TR DTC144EUA T106	T	76.6/66.1
Q502	1530002280	S.TR 2SC4081 T106 S	T	67.9/72.3
Q503	1520000200	S.TR 2SB798-T2 DK	B	74.3/68.5
Q504	1530002280	S.TR 2SC4081 T106 S	B	70/74.5
Q550	1590000430	S.TR DTC144EUA T106	B	15.5/49.9
Q551	1530002280	S.TR 2SC4081 T106 S	B	15.7/64.1
D50	1790001240	S.DIO MA2S728-(TX)	T	59.3/66.6
D51	1750000550	S.DIO 1SS355 TE-17	B	1.4/48.1
D52	1750000550	S.DIO 1SS355 TE-17	B	50.1/60.5
D53	1750000550	S.DIO 1SS355 TE-17	T	46.6/59.5
D54	1750000550	S.DIO 1SS355 TE-17	B	48.1/66.7
D55	1730002280	S.ZEN MA8091-M (TX)	T	12.7/43.9
D201	1790001240	S.DIO MA2S728-(TX)	B	39.6/51.1
D350	1720000360	S.DIO HSU88TRF	T	85.3/24.3
D351	1720000360	S.DIO HSU88TRF	T	87.7/19.4
D501	1790000670	S.DIO SB07-03C-TB	T	72.2/69.6
D502	1750000550	S.DIO 1SS355 TE-17	T	71.2/72.3
D503	1790000670	S.DIO SB07-03C-TB	T	99.4/65.9
D504	1790000670	S.DIO SB07-03C-TB	B	110.2/74.1
X50	6050011290	S.XTL CR-715 (6 MHz)	T	44.4/47.2
X100	6050011300	S.XTL CR-716 (20 MHz)	T	99.1/55.5
X200	6050011240	S.XTL CR-708 (16.384 MHz)	T	19/34.3
X201	6050011700	S.XTL CR-760 (9.8304 MHz)	T	37.2/33.3
X550	6050011290	S.XTL CR-715 (6 MHz)	T	3.4/55.5
L50	6200005740	S.COL ELJRE 47NG-F	T	65.2/67.6
L51	6200005740	S.COL ELJRE 47NG-F	T	48.4/46
L100	6200005740	S.COL ELJRE 47NG-F	B	111.3/56
L101	6200005740	S.COL ELJRE 47NG-F	B	111.3/57.3
L102	6200005740	S.COL ELJRE 47NG-F	T	87/52.4
L103	6200005740	S.COL ELJRE 47NG-F	B	108.5/27.6
L114	6200006990	S.COL ELJRE 56NG-F	B	11.9/70.6
L115	6200006990	S.COL ELJRE 56NG-F	B	13.4/70.6
L116	6200006990	S.COL ELJRE 56NG-F	B	14.9/70.6
L117	6200006990	S.COL ELJRE 56NG-F	B	16.2/70.6
L119	6200006990	S.COL ELJRE 56NG-F	B	19.5/70.6
L120	6200006990	S.COL ELJRE 56NG-F	B	20.9/70.6
L121	6200006990	S.COL ELJRE 56NG-F	B	22.7/70.6
L150	6200002040	S.COL NL 252018T-101J	T	99.7/17
L210	6200005740	S.COL ELJRE 47NG-F	T	70.6/67.4
L211	6200005740	S.COL ELJRE 47NG-F	B	47.7/53.7
L214	6200005740	S.COL ELJRE 47NG-F	B	49/56.4
L420	6200003590	S.COL EXCCL3225U1	B	30.9/74
L421	6200003590	S.COL EXCCL3225U1	B	38.8/73.9
L500	6190001560	S.COL CDRH5D18-101NC	T	104.3/74
L501	6190001560	S.COL CDRH5D18-101NC	T	104.3/66.8
L510	6200003590	S.COL EXCCL3225U1	B	108.8/70.7
L550	6200002040	S.COL NL 252018T-101J	T	12.5/70.5
L551	6200005740	S.COL ELJRE 47NG-F	T	15.6/71.3
L552	6200006990	S.COL ELJRE 56NG-F	B	14.6/55.8
R1	7030003670	S.RES ERJ3GEYJ 823 V (82 kΩ)	T	2.9/20.9
R2	7030003670	S.RES ERJ3GEYJ 823 V (82 kΩ)	T	2.9/23.5
R12	7030003640	S.RES ERJ3GEYJ 473 V (47 kΩ)	B	37.4/57.5
R13	7030003640	S.RES ERJ3GEYJ 473 V (47 kΩ)	T	37.1/61.8
R14	7030003640	S.RES ERJ3GEYJ 473 V (47 kΩ)	T	35.8/61.8
R15	7030003640	S.RES ERJ3GEYJ 473 V (47 kΩ)	T	34.5/61.8
R16	7030003640	S.RES ERJ3GEYJ 473 V (47 kΩ)	T	33.2/61.8
R17	7030003640	S.RES ERJ3GEYJ 473 V (47 kΩ)	B	35.3/57.5
R18	7030003640	S.RES ERJ3GEYJ 473 V (47 kΩ)	T	35.5/40.5
R25	7030003320	S.RES ERJ3GEYJ 101 V (100 Ω)	T	14.8/22.7
R50	7030003640	S.RES ERJ3GEYJ 473 V (47 kΩ)	B	44.4/69.8
R51	7030003620	S.RES ERJ3GEYJ 333 V (33 kΩ)	T	47.2/65
R53	7030003640	S.RES ERJ3GEYJ 473 V (47 kΩ)	T	48.5/62.4
R54	7030003560	S.RES ERJ3GEYJ 103 V (10 kΩ)	T	15.5/44.4
R55	7030003640	S.RES ERJ3GEYJ 473 V (47 kΩ)	T	15.5/43
R57	7030003520	S.RES ERJ3GEYJ 472 V (4.7 kΩ)	B	3.7/43.9
R58	7030003680	S.RES ERJ3GEYJ 104 V (100 kΩ)	T	15.4/46.2
R59	7030003500	S.RES ERJ3GEYJ 332 V (3.3 kΩ)	B	2.4/43.9
R60	7030003570	S.RES ERJ3GEYJ 123 V (12 kΩ)	B	47.7/56.4
R61	7030003570	S.RES ERJ3GEYJ 123 V (12 kΩ)	B	45.8/56.4
R62	7030003620	S.RES ERJ3GEYJ 333 V (33 kΩ)	B	49.3/45.1
R63	7030003520	S.RES ERJ3GEYJ 472 V (4.7 kΩ)	B	53.9/44.5
R64	7030003320	S.RES ERJ3GEYJ 101 V (100 Ω)	B	61.5/39.7
R65	7030003320	S.RES ERJ3GEYJ 101 V (100 Ω)	B	62.8/39.7
R66	7030003320	S.RES ERJ3GEYJ 101 V (100 Ω)	T	72.5/35.1
R67	7030003320	S.RES ERJ3GEYJ 101 V (100 Ω)	T	72.5/37.7
R68	7030003600	S.RES ERJ3GEYJ 223 V (22 kΩ)	B	9.1/45.6
R69	7030003490	S.RES ERJ3GEYJ 272 V (2.7 kΩ)	T	8.2/46.7
R70	7030003620	S.RES ERJ3GEYJ 333 V (33 kΩ)	B	4.4/45.8
R71	7030003620	S.RES ERJ3GEYJ 333 V (33 kΩ)	B	4/50.5
R72	7030003620	S.RES ERJ3GEYJ 333 V (33 kΩ)	B	6.3/51.4
R73	7030003530	S.RES ERJ3GEYJ 562 V (5.6 kΩ)	B	7.1/49.6
R74	7030003640	S.RES ERJ3GEYJ 473 V (47 kΩ)	B	46.3/68.7
R75	7030003570	S.RES ERJ3GEYJ 123 V (12 kΩ)	B	48.1/69
R76	7030003510	S.RES ERJ3GEYJ 392 V (3.9 kΩ)	B	67.9/38.3

M.=Mounted side (T: Mounted on the Top side, B: Mounted on the Bottom side)
S.=Surface mount

[LOGIC-1 UNIT]

REF NO.	ORDER NO.	DESCRIPTION	M.	H/V LOCATION
R78	7030003360	S.RES ERJ3GEYJ 221 V (220 Ω)	T	50.9/43.3
R79	7030003340	S.RES ERJ3GEYJ 151 V (150 Ω)	T	48.6/50.2
R100	7030003640	S.RES ERJ3GEYJ 473 V (47 kΩ)	T	76.5/26.2
R101	7030003560	S.RES ERJ3GEYJ 103 V (10 kΩ)	T	88/27.8
R102	7030003560	S.RES ERJ3GEYJ 103 V (10 kΩ)	T	88/26.5
R105	7030003380	S.RES ERJ3GEYJ 331 V (330 Ω)	T	95.8/55.9
R106	7030003800	S.RES ERJ3GEYJ 105 V (1 MΩ)	T	95.8/53.1
R107	7030003360	S.RES ERJ3GEYJ 221 V (220 Ω)	T	81.7/53.1
R108	7030003560	S.RES ERJ3GEYJ 103 V (10 kΩ)	T	87.5/50.6
R110	7030003370	S.RES ERJ3GEYJ 271 V (270 Ω)	B	52.3/8
R111	7030003410	S.RES ERJ3GEYJ 561 V (560 Ω)	B	90.3/44.5
R112	7030003410	S.RES ERJ3GEYJ 561 V (560 Ω)	B	89/44.5
R113	7030003370	S.RES ERJ3GEYJ 271 V (270 Ω)	B	42.1/5.9
R114	7030003420	S.RES ERJ3GEYJ 681 V (680 Ω)	B	39.5/5.9
R115	7030003640	S.RES ERJ3GEYJ 473 V (47 kΩ)	B	110.9/54.7
R116	7030003640	S.RES ERJ3GEYJ 473 V (47 kΩ)	B	106.3/57.8
R146	7030003640	S.RES ERJ3GEYJ 473 V (47 kΩ)	B	79.1/23.5
R148	7030003640	S.RES ERJ3GEYJ 473 V (47 kΩ)	B	105.5/9.9
R149	7030003320	S.RES ERJ3GEYJ 101 V (100 Ω)	T	88.4/14.2
R150	7030003640	S.RES ERJ3GEYJ 473 V (47 kΩ)	B	97.9/11
R151	7030003640	S.RES ERJ3GEYJ 473 V (47 kΩ)	B	97.9/9.7
R152	7030003640	S.RES ERJ3GEYJ 473 V (47 kΩ)	B	97.9/12.3
R153	7030003440	S.RES ERJ3GEYJ 102 V (1 kΩ)	B	97.9/14.9
R154	7030003640	S.RES ERJ3GEYJ 473 V (47 kΩ)	B	97.9/13.6
R155	7030003800	S.RES ERJ3GEYJ 105 V (1 MΩ)	T	92.4/15.3
R156	7030003640	S.RES ERJ3GEYJ 473 V (47 kΩ)	B	90.7/8.2
R157	7030003640	S.RES ERJ3GEYJ 473 V (47 kΩ)	B	95.3/8.8
R158	7030003750	S.RES ERJ3GEYJ 394 V (390 kΩ)	B	100.8/7.5
R159	7030009340	S.RES ERJ3GEYJ 275V (2.7 MΩ)	B	99.7/10.1
R199	7030003320	S.RES ERJ3GEYJ 101 V (100 Ω)	B	32.7/53.4
R200	7030003320	S.RES ERJ3GEYJ 101 V (100 Ω)	T	28.1/32
R201	7030003800	S.RES ERJ3GEYJ 105 V (1 MΩ)	T	22.4/32.8
R202	7030003520	S.RES ERJ3GEYJ 472 V (4.7 kΩ)	T	45.2/9.4
R203	7030003520	S.RES ERJ3GEYJ 472 V (4.7 kΩ)	T	31.6/5.8
R204	7030003640	S.RES ERJ3GEYJ 473 V (47 kΩ)	T	39/5.8
R205	7030003440	S.RES ERJ3GEYJ 102 V (1 kΩ)	B	24.3/23.2
R206	7030003440	S.RES ERJ3GEYJ 102 V (1 kΩ)	T	18.2/24.7
R207	7030003440	S.RES ERJ3GEYJ 102 V (1 kΩ)	T	18.9/26.1
R208	7030003320	S.RES ERJ3GEYJ 101 V (100 Ω)	B	34.8/34.8
R209	7030003800	S.RES ERJ3GEYJ 105 V (1 MΩ)	B	35.6/33
R210	7030003440	S.RES ERJ3GEYJ 102 V (1 kΩ)	T	41.5/33.3
R211	7030003400	S.RES ERJ3GEYJ 471 V (470 Ω)	B	37.8/52
R250	7030005661	S.RES ERA3YED 203V (20 kΩ)	T	52.9/5.8
R251	7030005661	S.RES ERA3YED 203V (20 kΩ)	T	48.9/5.8
R252	7030005321	S.RES ERA3YED 103V (10 kΩ)	T	50.8/6.6
R253	7030005661	S.RES ERA3YED 203V (20 kΩ)	T	48.9/7.1
R254	7030005321	S.RES ERA3YED 103V (10 kΩ)	T	52.5/7.9
R255	7030005661	S.RES ERA3YED 203V (20 kΩ)	T	48.9/8.4
R256	7030005321	S.RES ERA3YED 103V (10 kΩ)	T	50.8/9.2
R257	7030005661	S.RES ERA3YED 203V (20 kΩ)	T	48.9/9.7
R258	7030005321	S.RES ERA3YED 103V (10 kΩ)	T	52.5/10.5
R259	7030005661	S.RES ERA3YED 203V (20 kΩ)	T	48.9/11
R260	7030005321	S.RES ERA3YED 103V (10 kΩ)	T	50.8/11.8
R261	7030005661	S.RES ERA3YED 203V (20 kΩ)	T	48.9/12.3
R262	7030005321	S.RES ERA3YED 103V (10 kΩ)	T	52.5/13.1
R263	7030005661	S.RES ERA3YED 203V (20 kΩ)	T	48.9/13.6
R264	7030005321	S.RES ERA3YED 103V (10 kΩ)	T	50.8/14.4
R265	7030005661	S.RES ERA3YED 203V (20 kΩ)	T	48.9/14.9
R266	7030005321	S.RES ERA3YED 103V (10 kΩ)	T	52.5/15.7
R267	7030005661	S.RES ERA3YED 203V (20 kΩ)	T	48.9/16.2
R268	7030005321	S.RES ERA3YED 103V (10 kΩ)	T	50.8/17
R269	7030005661	S.RES ERA3YED 203V (20 kΩ)	T	48.9/17.5
R270	7030005321	S.RES ERA3YED 103V (10 kΩ)	T	52.5/18.3
R271	7030005661	S.RES ERA3YED 203V (20 kΩ)	T	48.9/18.8
R272	7030005661	S.RES ERA3YED 203V (20 kΩ)	T	52.7/20.2
R273	7030005661	S.RES ERA3YED 203V (20 kΩ)	T	48.9/20.2
R274	7030005321	S.RES ERA3YED 103V (10 kΩ)	T	50.8/20.7
R275	7030005661	S.RES ERA3YED 203V (20 kΩ)	T	48.9/21.5
R276	7030005321	S.RES ERA3YED 103V (10 kΩ)	T	52.1/22.1
R277	7030005661	S.RES ERA3YED 203V (20 kΩ)	T	48.9/22.8
R278	7030005321	S.RES ERA3YED 103V (10 kΩ)	T	50.8/23.3
R279	7030005661	S.RES ERA3YED 203V (20 kΩ)	T	48.9/24.1
R280	7030005321	S.RES ERA3YED 103V (10 kΩ)	T	52.1/24.7
R281	7030005661	S.RES ERA3YED 203V (20 kΩ)	T	48.9/25.4
R282	7030005321	S.RES ERA3YED 103V (10 kΩ)	T	50.8/25.9
R283	7030005661	S.RES ERA3YED 203V (20 kΩ)	T	48.9/26.7
R284	7030005321	S.RES ERA3YED 103V (10 kΩ)	T	52.1/27.3
R285	7030005661	S.RES ERA3YED 203V (20 kΩ)	T	48.9/28
R286	7030005321	S.RES ERA3YED 103V (10 kΩ)	T	50.8/28.5
R287	7030005661	S.RES ERA3YED 203V (20 kΩ)	T	48.9/29.3
R288	7030005321	S.RES ERA3YED 103V (10 kΩ)	T	52.1/29.9
R289	7030005661	S.RES ERA3YED 203V (20 kΩ)	T	48.9/30.6
R290	7030005321	S.RES ERA3YED 103V (10 kΩ)	T	50.8/31.1
R291	7030005661	S.RES ERA3YED 203V (20 kΩ)	T	48.9/31.9
R292	7030005321	S.RES ERA3YED 103V (10 kΩ)	T	52.1/32.7
R293	7030005661	S.RES ERA3YED 203V (20 kΩ)	T	48.9/33.2
R300	7030003320	S.RES ERJ3GEYJ 101 V (100 Ω)	T	60.7/14.9
R301	7030003520	S.RES ERJ3GEYJ 472 V (4.7 kΩ)	T	56.4/22.1
R302	7030003530	S.RES ERJ3GEYJ 562 V (5.6 kΩ)	T	61.8/22.1
R303	7030003530	S.RES ERJ3GEYJ 562 V (5.6 kΩ)	T	63.7/19.4
R304	7030003480	S.RES ERJ3GEYJ 222 V (2.2 kΩ)	T	67.4/11.7

[LOGIC-1 UNIT]

REF NO.	ORDER NO.	DESCRIPTION	M.	H/V LOCATION
R305	7030003480	S.RES ERJ3GEYJ 222 V (2.2 kΩ)	T	67.4/13
R306	7030003480	S.RES ERJ3GEYJ 222 V (2.2 kΩ)	T	63.7/16.8
R307	7030003480	S.RES ERJ3GEYJ 222 V (2.2 kΩ)	T	63.7/14.2
R308	7030003600	S.RES ERJ3GEYJ 223 V (22 kΩ)	T	64.2/12.1
R310	7030003320	S.RES ERJ3GEYJ 101 V (100 Ω)	T	59.3/26
R311	7030003520	S.RES ERJ3GEYJ 472 V (4.7 kΩ)	T	55/33.2
R312	7030003530	S.RES ERJ3GEYJ 562 V (5.6 kΩ)	T	60.4/33.2
R313	7030003530	S.RES ERJ3GEYJ 562 V (5.6 kΩ)	T	62.3/30.5
R314	7030003480	S.RES ERJ3GEYJ 222 V (2.2 kΩ)	T	68.1/28.4
R315	7030003480	S.RES ERJ3GEYJ 222 V (2.2 kΩ)	T	68.1/27.1
R316	7030003480	S.RES ERJ3GEYJ 222 V (2.2 kΩ)	T	65.5/31
R317	7030003480	S.RES ERJ3GEYJ 222 V (2.2 kΩ)	T	68.1/31
R318	7030003600	S.RES ERJ3GEYJ 223 V (22 kΩ)	T	67.3/25.8
R320	7030003320	S.RES ERJ3GEYJ 101 V (100 Ω)	B	61.5/18.3
R348	7030003320	S.RES ERJ3GEYJ 101 V (100 Ω)	B	101.4/24
R349	7030003320	S.RES ERJ3GEYJ 101 V (100 Ω)	T	77.5/20.4
R350	7030003320	S.RES ERJ3GEYJ 101 V (100 Ω)	T	80.1/21.2
R351	7030003730	S.RES ERJ3GEYJ 274 V (270 kΩ)	T	96.5/25
R352	7030004710	S.RES ERJ3GEYJ 475 V (4.7 MΩ)	T	98.4/24.4
R353	7030003730	S.RES ERJ3GEYJ 274 V (270 kΩ)	T	96.5/21.1
R354	7030004710	S.RES ERJ3GEYJ 475 V (4.7 MΩ)	T	98.4/21.8
R355	7030003680	S.RES ERJ3GEYJ 104 V (100 kΩ)	T	103.2/21.8
R356	7030003680	S.RES ERJ3GEYJ 104 V (100 kΩ)	B	84.1/22.7
R357	7030003680	S.RES ERJ3GEYJ 104 V (100 kΩ)	B	84.9/20.8
R358	7030003320	S.RES ERJ3GEYJ 101 V (100 Ω)	T	99.7/18.9
R359	7030003560	S.RES ERJ3GEYJ 103 V (10 kΩ)	B	84/14.3
R360	7030003560	S.RES ERJ3GEYJ 103 V (10 kΩ)	B	86.6/15.2
R361	7030003600	S.RES ERJ3GEYJ 223 V (22 kΩ)	B	87.9/19.9
R362	7030003560	S.RES ERJ3GEYJ 103 V (10 kΩ)	B	90/19.1
R363	7030003800	S.RES ERJ3GEYJ 105 V (1 MΩ)	B	90.6/22.9
R364	7030003320	S.RES ERJ3GEYJ 101 V (100 Ω)	B	92.4/23.6
R365	7030003480	S.RES ERJ3GEYJ 222 V (2.2 kΩ)	T	90.7/19.7
R368	7030003520	S.RES ERJ3GEYJ 472 V (4.7 kΩ)	B	82.8/22.7
R400	7030003320	S.RES ERJ3GEYJ 101 V (100 Ω)	B	86.1/10.8
R402	7030003440	S.RES ERJ3GEYJ 102 V (1 kΩ)	B	12.2/15
R403	7030003320	S.RES ERJ3GEYJ 101 V (100 Ω)	T	15/5.9
R405	7030003440	S.RES ERJ3GEYJ 102 V (1 kΩ)	T	15/7.2
R406	7030003320	S.RES ERJ3GEYJ 101 V (100 Ω)	T	82/14.2
R407	7030003440	S.RES ERJ3GEYJ 102 V (1 kΩ)	T	83.3/14.2
R408	7030003320	S.RES ERJ3GEYJ 101 V (100 Ω)	T	84.6/14.2
R410	7030003440	S.RES ERJ3GEYJ 102 V (1 kΩ)	B	16.7/15
R411	7030003440	S.RES ERJ3GEYJ 102 V (1 kΩ)	B	18/15
R412	7030003440	S.RES ERJ3GEYJ 102 V (1 kΩ)	B	15.4/15
R413	7030003440	S.RES ERJ3GEYJ 102 V (1 kΩ)	B	14.1/15
R414	7030003440	S.RES ERJ3GEYJ 102 V (1 kΩ)	B	10.9/15
R415	7030003440	S.RES ERJ3GEYJ 102 V (1 kΩ)	T	40.7/68.9
R416	7030003440	S.RES ERJ3GEYJ 102 V (1 kΩ)	B	82.2/7.3
R417	7030003440	S.RES ERJ3GEYJ 102 V (1 kΩ)	B	83.5/7.3
R418	7030003440	S.RES ERJ3GEYJ 102 V (1 kΩ)	B	29.3/68.9
R419	7030003440	S.RES ERJ3GEYJ 102 V (1 kΩ)	T	28.5/68.9
R420	7030003440	S.RES ERJ3GEYJ 102 V (1 kΩ)	T	29.8/68.9
R421	7030003440	S.RES ERJ3GEYJ 102 V (1 kΩ)	T	31.1/68.9
R422	7030003320	S.RES ERJ3GEYJ 101 V (100 Ω)	T	75.5/14.2
R423	7030003440	S.RES ERJ3GEYJ 102 V (1 kΩ)	B	28/68.9
R424	7030003440	S.RES ERJ3GEYJ 102 V (1 kΩ)	T	42/68.9
R425	7030003320	S.RES ERJ3GEYJ 101 V (100 Ω)	T	74.2/14.2
R426	7030003560	S.RES ERJ3GEYJ 103 V (10 kΩ)	T	71.5/14.2
R427	7030003560	S.RES ERJ3GEYJ 103 V (10 kΩ)	B	80.9/10.8
R428	7030003320	S.RES ERJ3GEYJ 101 V (100 Ω)	T	72.9/14.2
R429	7030003320	S.RES ERJ3GEYJ 101 V (100 Ω)	T	78.1/14.2
R430	7030003320	S.RES ERJ3GEYJ 101 V (100 Ω)	T	80.7/14.2
R431	7030003320	S.RES ERJ3GEYJ 101 V (100 Ω)	T	76.8/14.2
R432	7030003320	S.RES ERJ3GEYJ 101 V (100 Ω)	B	75.3/13.4
R433	7030003440	S.RES ERJ3GEYJ 102 V (1 kΩ)	T	27.2/68.9
R434	7030003320	S.RES ERJ3GEYJ 101 V (100 Ω)	B	85.4/8
R435	7030003320	S.RES ERJ3GEYJ 101 V (100 Ω)	T	79.4/14.2
R436	7030003320	S.RES ERJ3GEYJ 101 V (100 Ω)	B	22/15
R437	7030003320	S.RES ERJ3GEYJ 101 V (100 Ω)	B	73.4/12.5
R438	7030003480	S.RES ERJ3GEYJ 222 V (2.2 kΩ)	B	87.4/10.8
R439	7030003680	S.RES ERJ3GEYJ 104 V (100 kΩ)	T	86.5/13.4
R440	7030003640	S.RES ERJ3GEYJ 473 V (47 kΩ)	T	71.5/17.4
R500	7030003560	S.RES ERJ3GEYJ 103 V (10 kΩ)	T	80.4/66.8
R501	7030000420	S.RES MCR10EZHJ 2.2 kΩ	T	78.1/70.1
R502	7030003470	S.RES ERJ3GEYJ 182 V (1.8 kΩ)	B	72/73.7
R503	7030003530	S.RES ERJ3GEYJ 562 V (5.6 kΩ)	T	108.4/65.2
R504	7030003500	S.RES ERJ3GEYJ 332 V (3.3 kΩ)	T	111/65.2
R505	7030000020	S.RES MCR10EZHJ 1 Ω (010)	B	112.2/71.7
R506	7030003640	S.RES ERJ3GEYJ 473 V (47 kΩ)	B	66.7/71.9
R507	7030003570	S.RES ERJ3GEYJ 123 V (12 kΩ)	B	68/71.9
R508	7030003640	S.RES ERJ3GEYJ 473 V (47 kΩ)	B	68/74.5
R509	7030003600	S.RES ERJ3GEYJ 223 V (22 kΩ)	T	109.7/65.2
R510	7030003520	S.RES ERJ3GEYJ 472 V (4.7 kΩ)	T	69.8/70.1
R511	7030000180	S.RES MCR10EZHJ 22 Ω (220)	T	81.4/68.4
R512	7030000180	S.RES MCR10EZHJ 22 Ω (220)	T	81.4/70.1
R513	7030000420	S.RES MCR10EZHJ 2.2 kΩ	T	78.1/68.4
R550	7030003550	S.RES ERJ3GEYJ 822 V (8.2 kΩ)	B	3.9/59.5
R551	7030003580	S.RES ERJ3GEYJ 153 V (15 kΩ)	B	3.9/57.8
R552	7030003550	S.RES ERJ3GEYJ 822 V (8.2 kΩ)	B	9.9/56.8
R553	7030003580	S.RES ERJ3GEYJ 153 V (15 kΩ)	B	9.9/55.5
R556	7030003680	S.RES ERJ3GEYJ 104 V (100 kΩ)	B	10.5/63.4
R557	7030003680	S.RES ERJ3GEYJ 104 V (100 kΩ)	B	13.7/60.1
R558	7030003400	S.RES ERJ3GEYJ 471 V (470 Ω)	B	17.2/55.8

M.=Mounted side (T: Mounted on the Top side, B: Mounted on the Bottom side)
S.=Surface mount

[LOGIC-1 UNIT]

REF NO.	ORDER NO.	DESCRIPTION	M.	H/V LOCATION
R559	7030003530	S.RES ERJ3GEYJ 562 V (5.6 kΩ)	B	12.4/62.6
R560	7030003680	S.RES ERJ3GEYJ 104 V (100 kΩ)	T	17.8/52.2
R561	7030003560	S.RES ERJ3GEYJ 103 V (10 kΩ)	B	12.9/52.4
R562	7030003460	S.RES ERJ3GEYJ 152 V (1.5 kΩ)	B	15.8/62.2
R563	7030003200	S.RES ERJ3GEYJ 100 V (10 Ω)	T	18.8/68.8
R564	7030003200	S.RES ERJ3GEYJ 100 V (10 Ω)	T	19.2/63.6
R566	7030003480	S.RES ERJ3GEYJ 222 V (2.2 kΩ)	B	12.1/54.3
R567	7030003640	S.RES ERJ3GEYJ 473 V (47 kΩ)	B	13.6/49
R568	7030003340	S.RES ERJ3GEYJ 151 V (150 Ω)	B	11.9/51
R569	7030003600	S.RES ERJ3GEYJ 223 V (22 kΩ)	B	13.7/62.7
C1	4030011600	S.CER C1608 JB 1E 104K-T	T	2.9/19.5
C2	4030007170	S.CER C1608 CH 1H 221J-T	T	2.9/22.2
C3	4030011600	S.CER C1608 JB 1E 104K-T	T	7.1/22.7
C4	4550006250	S.TAN TEESVA 1A 106M8L	T	5.4/21.5
C5	4030011600	S.CER C1608 JB 1E 104K-T	T	8.5/22.7
C6	4550006250	S.TAN TEESVA 1A 106M8L	T	10.2/22.4
C7	4030010760	S.CER C1608 CH 1H 331J-T	T	13.4/21.6
C8	4030009580	S.CER C1608 JB 1H 681K-T	T	12.9/23.5
C9	4030011600	S.CER C1608 JB 1E 104K-T	T	14.8/20
C11	4030011600	S.CER C1608 JB 1E 104K-T	B	11.5/30
C12	4550006250	S.TAN TEESVA 1A 106M8L	T	18.3/43.2
C13	4030011600	S.CER C1608 JB 1E 104K-T	T	2.3/38.7
C14	4550006250	S.TAN TEESVA 1A 106M8L	T	24.2/39.9
C15	4030007090	S.CER C1608 CH 1H 470J-T	T	38.9/61.8
C16	4030011600	S.CER C1608 JB 1E 104K-T	T	30.8/61.8
C17	4030011600	S.CER C1608 JB 1E 104K-T	B	36.6/50.3
C18	4030011600	S.CER C1608 JB 1E 104K-T	T	41/49
C19	4030011600	S.CER C1608 JB 1E 104K-T	T	32.6/41
C20	4030011600	S.CER C1608 JB 1E 104K-T	B	41.7/47.2
C21	4030011600	S.CER C1608 JB 1E 104K-T	B	27.9/46.8
C22	4030011600	S.CER C1608 JB 1E 104K-T	T	21.6/54.7
C23	4030011600	S.CER C1608 JB 1E 104K-T	T	21.6/50.5
C24	4550006250	S.TAN TEESVA 1A 106M8L	T	29.9/38.6
C25	4550006250	S.TAN TEESVA 1A 106M8L	B	48.9/40.9
C26	4030011600	S.CER C1608 JB 1E 104K-T	T	37.4/39.9
C51	4030006860	S.CER C1608 JB 1H 102K-T	B	44.4/68
C52	4030011600	S.CER C1608 JB 1E 104K-T	T	43.4/65
C53	4030011600	S.CER C1608 JB 1E 104K-T	B	43.9/57.2
C54	4030011600	S.CER C1608 JB 1E 104K-T	B	36.7/38.6
C55	4030011600	S.CER C1608 JB 1E 104K-T	T	54.4/67
C56	4030008560	S.CER C1608 CH 1H 300J-T	T	49/48.4
C57	4030008560	S.CER C1608 CH 1H 300J-T	T	47.7/48.1
C58	4030006900	S.CER C1608 JB 1H 103K-T	B	54.1/39.9
C59	4030011600	S.CER C1608 JB 1E 104K-T	T	61.9/40.6
C60	4030011600	S.CER C1608 JB 1E 104K-T	T	70.4/40.5
C61	4030007090	S.CER C1608 CH 1H 470J-T	B	46.4/51.3
C62	4030007090	S.CER C1608 CH 1H 470J-T	B	61.4/45.7
C63	4030007090	S.CER C1608 CH 1H 470J-T	B	63.3/46.5
C64	4030007090	S.CER C1608 CH 1H 470J-T	B	64.6/41.1
C65	4030007090	S.CER C1608 CH 1H 470J-T	B	57.3/38
C66	4030007090	S.CER C1608 CH 1H 470J-T	B	57.2/36.7
C67	4030007090	S.CER C1608 CH 1H 470J-T	B	71.5/61.3
C68	4030007090	S.CER C1608 CH 1H 470J-T	B	70.3/54.4
C69	4030007090	S.CER C1608 CH 1H 470J-T	B	66/46.2
C71	4030007090	S.CER C1608 CH 1H 470J-T	T	21.6/46
C86	4030006900	S.CER C1608 JB 1H 103K-T	B	47.1/49.5
C88	4030006850	S.CER C1608 JB 1H 471K-T	B	46.3/71.3
C100	4030006850	S.CER C1608 JB 1H 471K-T	B	79.5/40
C101	4030006900	S.CER C1608 JB 1H 103K-T	T	106.1/58.6
C102	4030006900	S.CER C1608 JB 1H 103K-T	T	110.9/57.2
C103	4030006900	S.CER C1608 JB 1H 103K-T	B	113.2/56.4
C104	4030006900	S.CER C1608 JB 1H 103K-T	T	113.1/47.2
C105	4030011600	S.CER C1608 JB 1E 104K-T	T	84.4/51.4
C106	4030007060	S.CER C1608 CH 1H 270J-T	T	94.5/55.9
C107	4030007060	S.CER C1608 CH 1H 270J-T	T	94.5/53.1
C108	4030011600	S.CER C1608 JB 1E 104K-T	T	103/43.3
C109	4030006900	S.CER C1608 JB 1H 103K-T	T	79.8/53.1
C110	4030006900	S.CER C1608 JB 1H 103K-T	T	92.5/53.1
C111	4030006900	S.CER C1608 JB 1H 103K-T	T	92.5/55.9
C112	4030006900	S.CER C1608 JB 1H 103K-T	T	79.8/55.9
C113	4030011600	S.CER C1608 JB 1E 104K-T	T	108.5/27.6
C121	4030007050	S.CER C1608 CH 1H 220J-T	T	11.9/73.8
C122	4030007050	S.CER C1608 CH 1H 220J-T	T	13.5/73.8
C123	4030007050	S.CER C1608 CH 1H 220J-T	T	14.9/73.8
C124	4030007050	S.CER C1608 CH 1H 220J-T	T	16.3/73.8
C126	4030007050	S.CER C1608 CH 1H 220J-T	T	19.1/73.8
C127	4030007050	S.CER C1608 CH 1H 220J-T	T	20.5/73.8
C128	4030007050	S.CER C1608 CH 1H 220J-T	T	21.9/73.8
C150	4030006900	S.CER C1608 JB 1H 103K-T	T	86.5/15.2
C151	4030011600	S.CER C1608 JB 1E 104K-T	T	104/10.1
C152	4550006700	S.TAN ECST1AY106R	T	105.7/10.9
C153	4030012600	S.CER C2012 JB 1A 105M-T	T	91.3/9.3
C154	4030011600	S.CER C1608 JB 1E 104K-T	T	91.5/7.7
C155	4030006860	S.CER C1608 JB 1H 102K-T	T	100.9/6.4
C156	4030006860	S.CER C1608 JB 1H 102K-T	T	104/7.5
C157	4030011600	S.CER C1608 JB 1E 104K-T	B	102.9/9.9
C158	4030011600	S.CER C1608 JB 1E 104K-T	T	91.1/15.3
C159	4030007130	S.CER C1608 CH 1H 101J-T	T	91.4/10.9
C160	4030008890	S.CER C1608 JB 1H 273K-T	B	100/6.2
C161	4030008890	S.CER C1608 JB 1H 273K-T	B	98.2/8.3

[LOGIC-1 UNIT]

REF NO.	ORDER NO.	DESCRIPTION	M.	H/V LOCATION
C162	4030007000	S.CER C1608 CH 1H 090D-T	B	93.3/8.5
C200	4030011600	S.CER C1608 JB 1E 104K-T	B	34.6/54.2
C202	4610001590	S.TRI TZC3R100A110R00	T	24.6/36.1
C203	4030011600	S.CER C1608 JB 1E 104K-T	T	28.1/33.3
C204	4030006980	S.CER C1608 CH 1H 070D-T	T	23.7/32.8
C206	4030006900	S.CER C1608 JB 1H 103K-T	T	17.3/18.8
C207	4030011600	S.CER C1608 JB 1E 104K-T	T	24.2/5.8
C208	4030006900	S.CER C1608 JB 1H 103K-T	T	34.2/5.8
C209	4030011600	S.CER C1608 JB 1E 104K-T	T	43.5/7.8
C210	4030011600	S.CER C1608 JB 1E 104K-T	B	32.1/29.7
C211	4030011600	S.CER C1608 JB 1E 104K-T	B	23.4/26.6
C212	4030009650	S.CER C1608 CH 1H 240J-T	T	39.3/37
C213	4030006980	S.CER C1608 CH 1H 070D-T	B	32.3/33
C214	4030006900	S.CER C1608 JB 1H 103K-T	B	38.1/30.3
C215	4610001590	S.TRI TZC3R100A110R00	T	32/33.8
C216	4550006780	S.TAN TEESVB2 0J 476M8R	B	48.8/25.6
C300	4550006250	S.TAN TEESVA 1A 106M8L	T	56.5/15.4
C301	4030010040	S.CER C1608 JB 1H 561K-T	T	59/22.1
C302	4030009490	S.CER C1608 JB 1H 821K-T	T	65/19.4
C303	4340000270	S.MLR ECHU 1H 121GB5	T	60.7/16.5
C304	4030007170	S.CER C1608 CH 1H 221J-T	T	67.4/14.3
C305	4030007170	S.CER C1608 CH 1H 221J-T	T	67.7/15.6
C306	4030007170	S.CER C1608 CH 1H 221J-T	T	65/16.8
C307	4030007170	S.CER C1608 CH 1H 221J-T	T	65/14.2
C308	4550005980	S.TAN TEESVA 1A 475M8L	T	60.3/11.7
C309	4030010760	S.CER C1608 CH 1H 331J-T	T	61.8/13.4
C310	4550006250	S.TAN TEESVA 1A 106M8L	T	55.2/26.5
C311	4030010040	S.CER C1608 JB 1H 561K-T	T	57.6/33.2
C312	4030009490	S.CER C1608 JB 1H 821K-T	T	63.6/30.5
C313	4340000270	S.MLR ECHU 1H 121GB5	T	59.4/27.6
C314	4030007170	S.CER C1608 CH 1H 221J-T	T	68.1/32.3
C315	4030007170	S.CER C1608 CH 1H 221J-T	T	68.1/33.6
C316	4030007170	S.CER C1608 CH 1H 221J-T	T	65.5/29.7
C317	4030007170	S.CER C1608 CH 1H 221J-T	T	68.1/29.7
C318	4550005980	S.TAN TEESVA 1A 475M8L	T	63.4/25.8
C319	4030010760	S.CER C1608 CH 1H 331J-T	T	65.1/22.4
C320	4510005600	S.ELE ECEV1CS100SR	B	59.6/21.7
C349	4550006250	S.TAN TEESVA 1A 106M8L	B	87.7/24.7
C350	4030011600	S.CER C1608 JB 1E 104K-T	T	82/20.4
C351	4030011600	S.CER C1608 JB 1E 104K-T	T	90.6/26.5
C352	4030011600	S.CER C1608 JB 1E 104K-T	T	76.5/22.3
C353	4030011810	S.CER C1608 JB 1A 224K-T	T	92.4/27.1
C354	4030011600	S.CER C1608 JB 1E 104K-T	T	93.7/27.1
C355	4030006860	S.CER C1608 JB 1H 102K-T	T	96.5/23.7
C356	4030006860	S.CER C1608 JB 1H 102K-T	T	96.5/22.4
C357	4030011600	S.CER C1608 JB 1E 104K-T	T	100.6/26.3
C358	4030006860	S.CER C1608 JB 1H 102K-T	T	101.3/21
C359	4030008920	S.CER C1608 JB 1H 473K-T	B	85.7/22.7
C360	4030011600	S.CER C1608 JB 1E 104K-T	T	104.8/16.4
C361	4030011810	S.CER C1608 JB 1A 224K-T	T	93.3/19.7
C362	4030011600	S.CER C1608 JB 1E 104K-T	B	85.2/17.8
C363	4030008920	S.CER C1608 JB 1H 473K-T	T	82/17.8
C364	4030011600	S.CER C1608 JB 1E 104K-T	T	93.3/18.4
C400	4030006850	S.CER C1608 JB 1H 471K-T	T	17.6/5.9
C401	4030007090	S.CER C1608 CH 1H 470J-T	T	17.6/7.2
C402	4030006900	S.CER C1608 JB 1H 103K-T	B	82/17.6
C403	4030007090	S.CER C1608 CH 1H 470J-T	B	16.8/19.1
C404	4030007090	S.CER C1608 CH 1H 470J-T	B	18.1/18.7
C405	4030007090	S.CER C1608 CH 1H 470J-T	B	15.5/19.1
C406	4030007090	S.CER C1608 CH 1H 470J-T	B	14.2/19.1
C407	4030007090	S.CER C1608 CH 1H 470J-T	T	38.8/68.1
C408	4030007090	S.CER C1608 CH 1H 470J-T	B	83.4/10.8
C409	4030007130	S.CER C1608 CH 1H 101J-T	B	77.1/14.2
C410	4030007130	S.CER C1608 CH 1H 101J-T	T	76.8/17.6
C411	4030007130	S.CER C1608 CH 1H 101J-T	B	83.9/17.8
C412	4030007130	S.CER C1608 CH 1H 101J-T	B	86.6/13.4
C413	4030007090	S.CER C1608 CH 1H 470J-T	T	43.3/68.9
C414	4030007090	S.CER C1608 CH 1H 470J-T	B	31.7/65.5
C415	4030007090	S.CER C1608 CH 1H 470J-T	B	30.4/65.5
C416	4030007090	S.CER C1608 CH 1H 470J-T	B	31.2/68.2
C417	4030007090	S.CER C1608 CH 1H 470J-T	B	29.1/65.5
C418	4030007090	S.CER C1608 CH 1H 470J-T	B	27.8/65.5
C419	4030007090	S.CER C1608 CH 1H 470J-T	B	26.5/65.5
C420	4030007090	S.CER C1608 CH 1H 470J-T	B	41.6/74.7
C421	4030007090	S.CER C1608 CH 1H 470J-T	B	29.7/71.8
C422	4030007090	S.CER C1608 CH 1H 470J-T	B	8.2/15.4
C423	4030007090	S.CER C1608 CH 1H 470J-T	B	9.5/15.4
C424	4030007090	S.CER C1608 CH 1H 470J-T	B	72/16.8
C425	4030007090	S.CER C1608 CH 1H 470J-T	B	71.3/14.2
C426	4030007090	S.CER C1608 CH 1H 470J-T	B	73.4/10.7
C427	4030007090	S.CER C1608 CH 1H 470J-T	T	74.9/18.1
C428	4030007090	S.CER C1608 CH 1H 470J-T	B	76.9/16.9
C429	4030007090	S.CER C1608 CH 1H 470J-T	T	78.1/16.8
C430	4030007090	S.CER C1608 CH 1H 470J-T	T	79.4/16.8
C431	4030007090	S.CER C1608 CH 1H 470J-T	B	87.3/7.2
C432	4030007090	S.CER C1608 CH 1H 470J-T	B	80.6/17.6
C433	4030007090	S.CER C1608 CH 1H 470J-T	B	80.9/14.2
C434	4030007090	S.CER C1608 CH 1H 470J-T	B	80.3/6.5
C435	4030007090	S.CER C1608 CH 1H 470J-T	B	82.2/14.2
C437	4030007090	S.CER C1608 CH 1H 470J-T	B	84.7/12.4
C438	4030007090	S.CER C1608 CH 1H 470J-T	B	22/17.6
C442	4030011600	S.CER C1608 JB 1E 104K-T	T	80.7/17.6

M.=Mounted side (T: Mounted on the Top side, B: Mounted on the Bottom side)
S.=Surface mount

[LOGIC-1 UNIT]

REF NO.	ORDER NO.	DESCRIPTION	M.	H/V LOCATION
C443	4030011810	S.CER C1608 JB 1A 224K-T	B	71.3/18.6
C500	4510004640	S.ELE ECEV1CA470SP	B	84.4/63.5
C501	4030011600	S.CER C1608 JB 1E 104K-T	T	84.1/66.4
C502	4030011600	S.CER C1608 JB 1E 104K-T	T	86.5/67
C503	4510004640	S.ELE ECEV1CA470SP	B	96.2/63.9
C504	4030006850	S.CER C1608 JB 1H 471K-T	T	86.5/65.7
C506	4030011600	S.CER C1608 JB 1E 104K-T	T	58.6/7.5
C509	4550006250	S.TAN TEESVA 1A 106M8L	T	85.3/64
C510	4030011600	S.CER C1608 JB 1E 104K-T	T	97.4/17.8
C511	4030011600	S.CER C1608 JB 1E 104K-T	T	90.5/64.2
C512	4550006250	S.TAN TEESVA 1A 106M8L	T	88.8/64.4
C513	4510007130	S.ELE EEFCD 0J 470R	T	98.6/73.1
C514	4030006850	S.CER C1608 JB 1H 471K-T	T	109.3/75.9
C515	4510005820	S.ELE ECEV1CA101P	B	109.5/63.3
C516	4510005600	S.ELE ECEV1CS100SR	B	64.2/76
C517	4030011600	S.CER C1608 JB 1E 104K-T	T	66.9/75.3
C518	4030011600	S.CER C1608 JB 1E 104K-T	T	64.5/72.5
C519	4550006250	S.TAN TEESVA 1A 106M8L	T	65.2/69.9
C520	4550006200	S.TAN ECST0JY106R	T	71.7/75.7
C521	4550006200	S.TAN ECST0JY106R	B	69.4/64.9
C522	4550006620	S.TAN ECST0JY226R	T	96.6/65.7
C550	4030008560	S.CER C1608 CH 1H 300J-T	T	4.2/63
C551	4030008560	S.CER C1608 CH 1H 300J-T	T	4.2/48
C552	4030011600	S.CER C1608 JB 1E 104K-T	B	14.3/57.6
C553	4030011600	S.CER C1608 JB 1E 104K-T	B	15.4/53.9
C554	4030011600	S.CER C1608 JB 1E 104K-T	T	18.1/56.2
C555	4030008880	S.CER C1608 JB 1H 223K-T	T	24/61
C556	4030007070	S.CER C1608 CH 1H 330J-T	B	18.7/64.1
C557	4550006200	S.TAN ECST0JY106R	T	13/68.2
C558	4030006900	S.CER C1608 JB 1H 103K-T	T	10.1/70.3
C559	4030007090	S.CER C1608 CH 1H 470J-T	T	84/55.1
C560	4030007090	S.CER C1608 CH 1H 470J-T	B	79.5/41.3
C561	4030007090	S.CER C1608 CH 1H 470J-T	T	85.7/51.4
C562	4030007090	S.CER C1608 CH 1H 470J-T	T	88.3/52.4
C563	4030007090	S.CER C1608 CH 1H 470J-T	T	103/42
C564	4030007090	S.CER C1608 CH 1H 470J-T	T	99.3/30
C565	4030007090	S.CER C1608 CH 1H 470J-T	B	96.2/34.6
C566	4030007090	S.CER C1608 CH 1H 470J-T	T	90.6/27.8
C567	4030007090	S.CER C1608 CH 1H 470J-T	T	85.4/27.8
C568	4030007090	S.CER C1608 CH 1H 470J-T	T	85.4/26.5
C569	4030007090	S.CER C1608 CH 1H 470J-T	T	78.8/28.4
C570	4030007090	S.CER C1608 CH 1H 470J-T	T	81.7/27.8
C571	4030007090	S.CER C1608 CH 1H 470J-T	B	93.2/44.5
C572	4030007090	S.CER C1608 CH 1H 470J-T	B	90.3/47.7
C573	4030007090	S.CER C1608 CH 1H 470J-T	B	89/47.7
C574	4030007090	S.CER C1608 CH 1H 470J-T	T	78.5/55.9
C575	4030007090	S.CER C1608 CH 1H 470J-T	T	78.5/53.1
C576	4030007090	S.CER C1608 CH 1H 470J-T	T	91.2/53.1
C577	4030007090	S.CER C1608 CH 1H 470J-T	T	91.2/55.9
C578	4030007090	S.CER C1608 CH 1H 470J-T	B	12.3/49
C579	4030007090	S.CER C1608 CH 1H 470J-T	B	10.7/47
J50	6510019270	S.CNR 52365-0691	T	5.1/43.9
J100	6510021290	S.CNR S10B-ZR-SM3A-TF	B	18.7/77.2
J101	6510022820	S.CNR AXN430C530P	B	17.2/8.8
J300	6510018350	S.CNR S3B-ZR-SM3A-TF	T	13.9/12.4
J400	6510022710	S.CNR 30FLZ-SM1-TB	T	78/7.7
J401	6510022710	S.CNR 30FLZ-SM1-TB	T	35/74.4
DS100	5040002050	LED SPR-39MVWF		
DS101	5040002050	LED SPR-39MVWF		
DS102	5040002050	LED SPR-39MVWF		
T100	5920000800	TSM 20F001N <YCL>		
W1	7030003860	S.RES ERJ3GE JPW V	T	11.9/20.1
W2	7030003860	S.RES ERJ3GE JPW V	B	12.3/31.9
W50	7030003860	S.RES ERJ3GE JPW V	T	51.8/67
W51	7030003860	S.RES ERJ3GE JPW V	B	47/59.2
W52	7030003860	S.RES ERJ3GE JPW V	B	59.2/64.3
W125	7030003860	S.RES ERJ3GE JPW V	T	17.7/73.8
W126	7030003860	S.RES ERJ3GE JPW V	T	10.4/76.8
W129	7030003860	S.RES ERJ3GE JPW V	T	23.3/73.8
W200	7030003860	S.RES ERJ3GE JPW V	B	58.3/16
W213	7030003860	S.RES ERJ3GE JPW V	B	43.7/29.1
W300	7030003860	S.RES ERJ3GE JPW V	T	55.5/5.8
W310	7030003860	S.RES ERJ3GE JPW V	T	71.6/21.4
W400	7030003860	S.RES ERJ3GE JPW V	B	77.3/12.3
W401	7030003860	S.RES ERJ3GE JPW V	B	77.7/7.3
W402	7030003860	S.RES ERJ3GE JPW V	B	7.7/34.4
W403	7030003860	S.RES ERJ3GE JPW V	B	36/71.1

[LOGIC-1 UNIT]

REF NO.	ORDER NO.	DESCRIPTION	M.	H/V LOCATION
IC1160	1150002190	IC RA18H1213G1-21		
J1	6510004910	CNR NR-DS-E 01		
MF1	2710000590	FAN MF40D-12H-001		
W1	8900010890	CBL OPC-1115		
W2	8900010890	CBL OPC-1115		
W3	8900011950	CBL OPC-1224		
EP1	6910000630	BEA FSRH070140RN000B		
EP20	6910011940	BEA ZCAT2436-1330A-BK-M [EUR2], [EUR3] only		
EP1160	6910000970	BEA DL-2OP 2.6-3-1.2H		
EP1162	6910000970	BEA DL-2OP 2.6-3-1.2H		

[RC-24] (Optional for some version)

REF NO.	ORDER NO.	DESCRIPTION	M.	H/V LOCATION
IC1	1130009120	S.IC SED1526F0A	B	69.5/29.5
IC2	1140007890	S.IC HD64F3644H	B	111.8/20.4
IC3	1110005940	S.IC S-80842CLMC-B63-T2	B	127.5/23.9
IC4	1130005720	S.IC TC7W04F (TE12L)	B	121/8.2
IC5	1110003390	S.IC AN8005M-(E1)	B	67.9/11.6
IC6	1110002860	S.IC TA75S393F (TE85R)	B	85.6/7.9
Q1	1530002060	S.TR 2SC4081 T106 R	B	133.6/18.1
Q2	1590000720	S.TR DTA144EUA T106	B	120.4/4
Q3	1590000680	S.TR DTC114EUA T106	B	123/2.7
Q6	1590000440	S.TR DTA143ZUA T106	B	90.4/14.6
Q7	1590000440	S.TR DTA143ZUA T106	B	86.9/20.8
Q8	1590000440	S.TR DTA143ZUA T106	B	90.4/17.1
Q9	1590000440	S.TR DTA143ZUA T106	B	90.7/19.7
Q10	1590000680	S.TR DTC114EUA T106	B	93.3/17
Q11	1590000680	S.TR DTC114EUA T106	B	93.3/19.5
Q12	1590000680	S.TR DTC114EUA T106	B	90.4/12.1
Q13	1530002060	S.TR 2SC4081 T106 R	B	34/7.1
D1	1790001280	S.DIO MA111 (TX)	B	134.1/21.7
D3	1790001280	S.DIO MA111 (TX)	B	116.2/2.4
D9	1750000130	S.DIO DA204U T106	B	132.6/10.1
D10	1790001280	S.DIO MA111 (TX)	B	126.3/3.8
D11	1790000660	S.DIO MA728 (TX)	B	126.2/2
D12	1790001280	S.DIO MA111 (TX)	B	129.8/2
D13	1790001280	S.DIO MA111 (TX)	B	114.2/8.4
X1	6050011310	S.XTL CR-717 (9.8304 MHz)	B	97.4/24.4
L1	6200001720	S.COL NL 322522T-1R0J	B	16.2/12.3
R1	7030003810	S.RES ERJ3GEYJ 125 V (1.2 MΩ)	B	90.8/40.5
R2	7310002820	S.TRI RV-158 (RH03A3AS5) 474	B	93.7/39.4
R3	7030003800	S.RES ERJ3GEYJ 105 V (1 MΩ)	B	90/38.6
R4	7030003440	S.RES ERJ3GEYJ 102 V (1 kΩ)	B	129.3/21.5
R5	7030003680	S.RES ERJ3GEYJ 104 V (100 kΩ)	B	130.5/24.7
R6	7030003760	S.RES ERJ3GEYJ 474 V (470 kΩ)	B	134/23.5
R7	7030003560	S.RES ERJ3GEYJ 103 V (10 kΩ)	B	131.7/18.1
R8	7030003720	S.RES ERJ3GEYJ 224 V (220 kΩ)	B	131.8/20.8
R9	7030003720	S.RES ERJ3GEYJ 224 V (220 kΩ)	B	133.7/20.1
R10	7030003680	S.RES ERJ3GEYJ 104 V (100 kΩ)	B	102/15.9
R11	7030003800	S.RES ERJ3GEYJ 105 V (1 MΩ)	B	100.8/22.2
R12	7030003680	S.RES ERJ3GEYJ 104 V (100 kΩ)	B	102.3/27.5
R13	7030003680	S.RES ERJ3GEYJ 104 V (100 kΩ)	B	109.8/10.5
R16	7030003680	S.RES ERJ3GEYJ 104 V (100 kΩ)	B	118.4/3.9
R17	7030003680	S.RES ERJ3GEYJ 104 V (100 kΩ)	B	123.2/4.7
R18	7030003680	S.RES ERJ3GEYJ 104 V (100 kΩ)	B	120.3/13
R19	7030003680	S.RES ERJ3GEYJ 104 V (100 kΩ)	B	120.3/11.7
R27	7030003340	S.RES ERJ3GEYJ 151 V (150 Ω)	B	84.5/23.2
R28	7030003340	S.RES ERJ3GEYJ 151 V (150 Ω)	B	87.3/23.2
R29	7030003370	S.RES ERJ3GEYJ 271 V (270 Ω)	B	85/20.9
R30	7030003440	S.RES ERJ3GEYJ 102 V (1 kΩ)	B	93.3/21.7
R31	7030003440	S.RES ERJ3GEYJ 102 V (1 kΩ)	B	93.3/23
R32	7030003390	S.RES ERJ3GEYJ 391 V (390 Ω)	B	90.6/23
R34	7030003360	S.RES ERJ3GEYJ 221 V (220 Ω)	B	88.8/19.9
R35	7030003680	S.RES ERJ3GEYJ 104 V (100 kΩ)	B	124.2/27.1
R36	7030003680	S.RES ERJ3GEYJ 104 V (100 kΩ)	B	124.2/23.2
R37	7030003680	S.RES ERJ3GEYJ 104 V (100 kΩ)	B	124.2/24.5

[RC-24] (Optional for some version)

REF NO.	ORDER NO.	DESCRIPTION	M.	H/V LOCATION
R38	7030003680	S.RES ERJ3GEYJ 104 V (100 kΩ)	B	124.2/25.8
R39	7030003680	S.RES ERJ3GEYJ 104 V (100 kΩ)	B	124.2/12.8
R40	7030003680	S.RES ERJ3GEYJ 104 V (100 kΩ)	B	124.2/14.1
R41	7030003680	S.RES ERJ3GEYJ 104 V (100 kΩ)	B	124.2/15.4
R42	7030003680	S.RES ERJ3GEYJ 104 V (100 kΩ)	B	124.2/16.7
R43	7030003680	S.RES ERJ3GEYJ 104 V (100 kΩ)	B	124.2/19.3
R44	7030003680	S.RES ERJ3GEYJ 104 V (100 kΩ)	B	124.2/21.9
R45	7030003680	S.RES ERJ3GEYJ 104 V (100 kΩ)	B	124.2/20.6
R48	7030003440	S.RES ERJ3GEYJ 102 V (1 kΩ)	B	134.6/10.1
R49	7030003600	S.RES ERJ3GEYJ 223 V (22 kΩ)	B	114.3/5.3
R51	7030003640	S.RES ERJ3GEYJ 473 V (47 kΩ)	B	109.8/9.3
R52	7030003640	S.RES ERJ3GEYJ 473 V (47 kΩ)	B	11.2/36.2
R53	7030003640	S.RES ERJ3GEYJ 473 V (47 kΩ)	B	7.8/36.2
R54	7030003480	S.RES ERJ3GEYJ 222 V (2.2 kΩ)	B	129.4/3.8
R55	7030003440	S.RES ERJ3GEYJ 102 V (1 kΩ)	B	131.6/4.6
R56	7030003620	S.RES ERJ3GEYJ 333 V (33 kΩ)	B	88/7.9
R57	7030003470	S.RES ERJ3GEYJ 182 V (1.8 kΩ)	B	81.9/7.3
R58	7030003680	S.RES ERJ3GEYJ 104 V (100 kΩ)	B	83.2/7.9
R59	7030003500	S.RES ERJ3GEYJ 332 V (3.3 kΩ)	B	90.8/8.5
R60	7030003400	S.RES ERJ3GEYJ 471 V (470 Ω)	B	37.3/16.7
R61	7030003620	S.RES ERJ3GEYJ 333 V (33 kΩ)	B	32.1/7.6
R62	7030003620	S.RES ERJ3GEYJ 333 V (33 kΩ)	B	30.8/7.6
R63	7030003390	S.RES ERJ3GEYJ 391 V (390 Ω)	B	36.1/7.6
R64	7030005420	S.RES ERJ3GEYJ 202 V (2 kΩ)	B	21.6/9.5
R65	7030003500	S.RES ERJ3GEYJ 332 V (3.3 kΩ)	B	36.8/9.9
C1	4030011600	S.CER C1608 JB 1E 104K-T	B	79.2/40.5
C2	4030011600	S.CER C1608 JB 1E 104K-T	B	80.5/40.5
C3	4030011600	S.CER C1608 JB 1E 104K-T	B	81.8/40.5
C4	4030011600	S.CER C1608 JB 1E 104K-T	B	83.1/40.5
C5	4030011600	S.CER C1608 JB 1E 104K-T	B	84.4/40.5
C6	4030012600	S.CER C2012 JB 1A 105M-T	B	86.1/30.9
C7	4030012600	S.CER C2012 JB 1A 105M-T	B	82.4/31.2
C8	4030008630	S.CER C1608 JF 1H 104Z-T	B	77.4/40.5
C9	4030006860	S.CER C1608 JB 1H 102K-T	B	81.4/28.8
C10	4030009000	S.CER C2012 JB 1C 224K-T	B	130.9/23.1
C11	4030006900	S.CER C1608 JB 1H 103K-T	B	100.1/15.1
C12	4550003220	S.TAN TEESVA 1E 105M8L	B	97.4/14.8
C13	4030007030	S.CER C1608 CH 1H 150J-T	B	100.8/25.6
C14	4030007030	S.CER C1608 CH 1H 150J-T	B	100.8/19.5
C15	4030006860	S.CER C1608 JB 1H 102K-T	B	107.8/9.7
C16	4030006900	S.CER C1608 JB 1H 103K-T	B	109.8/8.1
C17	4030008630	S.CER C1608 JF 1H 104Z-T	B	119.7/28.3
C18	4030008630	S.CER C1608 JF 1H 104Z-T	B	74.5/11.5
C19	4030006850	S.CER C1608 JB 1H 471K-T	B	73.2/11.5
C20	4550006250	S.TAN TEESVA 1A 106M8L	B	71.5/12.3
C21	4550003220	S.TAN TEESVA 1E 105M8L	B	64.4/12.1
C22	4030008630	S.CER C1608 JF 1H 104Z-T	B	62.7/11.3
C23	4030006850	S.CER C1608 JB 1H 471K-T	B	61.4/11.3
C24	4030006850	S.CER C1608 JB 1H 471K-T	B	60.1/11.3
C25	4030006850	S.CER C1608 JB 1H 471K-T	B	51.9/7.6
C26	4030008630	S.CER C1608 JF 1H 104Z-T	B	117.1/5.4
C27	4030006860	S.CER C1608 JB 1H 102K-T	B	5.2/9.8
C28	4030007090	S.CER C1608 CH 1H 470J-T	B	6.5/9.8
C30	4030006860	S.CER C1608 JB 1H 102K-T	B	9.1/9.8
C32	4030007090	S.CER C1608 CH 1H 470J-T	B	92.1/4.3
C34	4030007090	S.CER C1608 CH 1H 470J-T	B	28.8/3.2
C35	4030007090	S.CER C1608 CH 1H 470J-T	B	41.9/4.2
C36	4030007090	S.CER C1608 CH 1H 470J-T	B	54.9/4.2
C37	4030007090	S.CER C1608 CH 1H 470J-T	B	67.9/4.2
C38	4030007090	S.CER C1608 CH 1H 470J-T	B	77.3/4.2
C39	4030007090	S.CER C1608 CH 1H 470J-T	B	94.1/30.2
C40	4030007090	S.CER C1608 CH 1H 470J-T	B	99.5/16.8
C41	4030007090	S.CER C1608 CH 1H 470J-T	B	110/35.9
C42	4030007090	S.CER C1608 CH 1H 470J-T	B	114.3/31.2
C43	4030007090	S.CER C1608 CH 1H 470J-T	B	116.9/31.2
C44	4030007090	S.CER C1608 CH 1H 470J-T	B	109.5/5.4
C45	4030007090	S.CER C1608 CH 1H 470J-T	B	118/36.9
C46	4030007090	S.CER C1608 CH 1H 470J-T	B	115.6/31.2
C47	4030007090	S.CER C1608 CH 1H 470J-T	B	118.2/31.2
C48	4030007090	S.CER C1608 CH 1H 470J-T	B	115.7/6.2
C49	4030007090	S.CER C1608 CH 1H 470J-T	B	128.6/36.9
C50	4030007090	S.CER C1608 CH 1H 470J-T	B	126.9/28.1
C51	4030007090	S.CER C1608 CH 1H 470J-T	B	127.2/17.6
C52	4030007090	S.CER C1608 CH 1H 470J-T	B	128.7/5.4
C53	4510004440	S.ELE ECEV1HA010SR	B	26.8/7
C54	4510004440	S.ELE ECEV1HA010SR	B	41.9/8.8
C55	4510005300	S.ELE ECEV1AA330SR	B	41.2/14.2
C56	4510005300	S.ELE ECEV1AA330SR	B	32/12.7
C57	4030006860	S.CER C1608 JB 1H 102K-T	B	21.6/7.8
C59	4030007090	S.CER C1608 CH 1H 470J-T	B	53.9/10.3
C60	4030007090	S.CER C1608 CH 1H 470J-T	B	72.1/7.8
C61	4030011600	S.CER C1608 JB 1E 104K-T	B	80.6/9.1
C62	4030007130	S.CER C1608 CH 1H 101J-T	B	85.6/5.6
C63	4030006900	S.CER C1608 JB 1H 103K-T	B	34.1/9.1
C64	4030006900	S.CER C1608 JB 1H 103K-T	B	38.4/7.4
J1	6450001470	CNR 95003-2881	T	9.7/6.1
J2	6510019420	S.CNR B8B-ZR-SM3-TF	B	53.4/16.7
J3	6510019270	S.CNR 52365-0691	B	94.5/10.5

[RC-24] (Optional for some versions)

REF NO.	ORDER NO.	DESCRIPTION	M.	H/V LOCATION
DS2	5040002470	S.LED FY1112H	T	31/26.4
DS3	5040002470	S.LED FY1112H	T	42.5/26.4
DS4	5040002470	S.LED FY1112H	T	54/26.4
DS5	5040002470	S.LED FY1112H	T	65.5/26.4
DS6	5040002470	S.LED FY1112H	T	77/26.4
DS7	5040002030	S.LED CL-170Y-CD-T	T	94/26.4
DS8	5040002030	S.LED CL-170Y-CD-T	T	124.7/31.6
DS10	5040002030	S.LED CL-170Y-CD-T	T	124.7/10.6
DS11	5040002030	S.LED CL-170Y-CD-T	T	113.7/31.6
DS13	5040002030	S.LED CL-170Y-CD-T	T	113.7/10.6
DS14	5040002030	S.LED CL-170Y-CD-T	T	34.5/4.2
DS15	5040002030	S.LED CL-170Y-CD-T	T	60.5/4.2
DS16	5040002030	S.LED CL-170Y-CD-T	T	86.5/4.2
S21	2250000270	ECR RH90N74E20-16F-1738	T	9.5/32.2
W3	7030000010	S.RES MCR10EZHJ JPW (000)	T	124.7/21.1
W4	7030000010	S.RES MCR10EZHJ JPW (000)	T	113.7/21.1
EP20	6910014690	S.BEA MPZ1608S221A-T	B	49.6/11
EP21	6910014690	S.BEA MPZ1608S221A-T	B	51.1/11
EP22	6910014690	S.BEA MPZ1608S221A-T	B	53.4/11.6
EP23	6910014690	S.BEA MPZ1608S221A-T	B	29.9/20
EP24	6910014690	S.BEA MPZ1608S221A-T	B	26.5/20.8
EP25	6910014690	S.BEA MPZ1608S221A-T	B	58.6/11.1
EP26	6910014690	S.BEA MPZ1608S221A-T	B	48.2/11
EP27	6910014690	S.BEA MPZ1608S221A-T	B	55.7/11

M.=Mounted side (T: Mounted on the Top side, B: Mounted on the Bottom side)
S.=Surface mount

SECTION 7 SEMI-CONDUCTOR INFORMATION

• TRANSISTORS AND FET's

2SA1362 GR (Symbol: AEG) 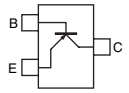	**2SA1586 GR** (Symbol: SG) 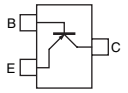	**2SB798 DK** (Symbol: DK) 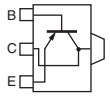	**2SB934 P** (Symbol: None) 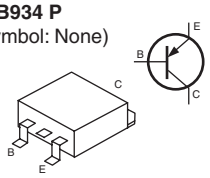	**2SC4081 R** (Symbol: BR) 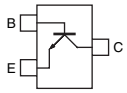
2SC4081 S (Symbol: BS) 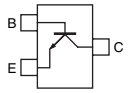	**2SC4215 O** (Symbol: QO) 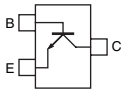	**2SC4226 R25** (Symbol: R25) 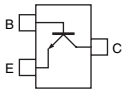	**2SC4684 (B type)** (Symbol: 2-7B2A) 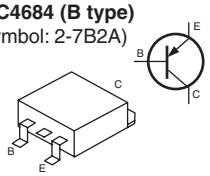	**2SC5107 O** (Symbol: MFO) 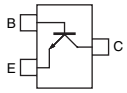
2SC5195 (Symbol: 88) 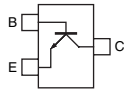	**2SC5454 R54** (Symbol: R54) 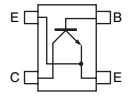	**2SD999 CK** (Symbol: CK) 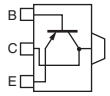	**2SD1619 T** (Symbol: DB) 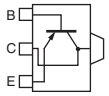	**2SD1801 S** (Symbol: CE) 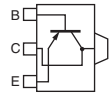
2SD2216J S (Symbol: Y) 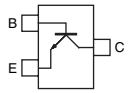	**2SJ144 GR** (Symbol: VG) 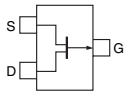	**2SK2036** (Symbol: KJ) 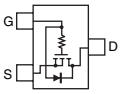	**2SK2854** (Symbol: UP) 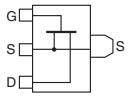	**2SK2855** (Symbol: UT) 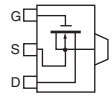
3SK241 R (Symbol: DU) 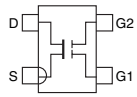	**DTA114 EU** (Symbol: 16) 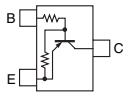	**DTA143 TUA** (Symbol: 113) 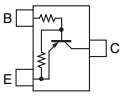	**DTA143 ZU** (Symbol: 113) 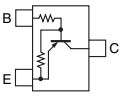	**DTA144 EU** (Symbol: 16) 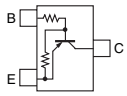
DTC114 EU (Symbol: 14) 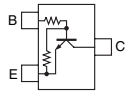	**DTC143 ZU** (Symbol: 123) 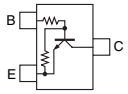	**DTC144 EU** (Symbol: 26) 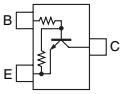	**NE34018** (Symbol: V63) 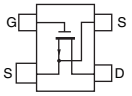	**XP1214** (Symbol: 9H) 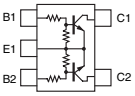
XP4315 (Symbol: CB) 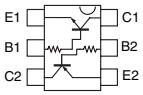				

• DIODES

1SS355 (Symbol: A) 	**1SS364** (Symbol: BF) 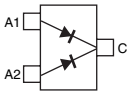	**1SS372** (Symbol: N9) 	**1SV239** (Symbol: TC) 	**1SV245** (Symbol: T3)
1SV282 (Symbol: TD) 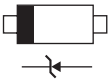	**1SV307** (Symbol: TX) 	**1SV308** (Symbol: TX) 	**DA204 U** (Symbol: K) 	**DSA3A1** (Symbol: Green) 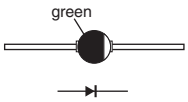
HSM88AS (Symbol: C1) 	**HSU88TRF** (Symbol: 9) 	**MA2S077** (Symbol: S) 	**MA2S728** (Symbol: B) 	**MA111** (Symbol: 1B)
MA4PH224 (Symbol: Red) 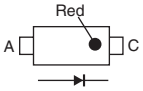	**MA728** (Symbol: 2A) 	**MA8030 H** (Symbol: 3^0) 	**MA8033 L** (Symbol: 3_3) 	**MA8062 M** (Symbol: 6-2)
MA8082 M (Symbol: 8-2) 	**MA8091 M** (Symbol: 9-1) 	**SB07-03C** (Symbol: J) 		

SECTION 8 MECHANICAL PARTS AND DISASSEMBLY

8-1 ID-1

[CHASSIS PARTS]

REF.NO.	ODER NO.	DESCRIPTION	QTY.
EP1160	6910000970	DL-20P 2.6-3-1.2H	1
EP1162	6910000970	DL-20P 2.6-3-1.2H	1
IC1160	1150002190	RA18H1213G1-21	1
J1	6510004910	NR-DS-E 01	1
MF1	2710000590	MF40D-12H-001	1
MP1	8010018711	2506 Chassis-1	1
MP2	8810008660	Screw PH BT M3x8 NI-ZU	2
MP3	8810008660	Screw PH BT M3x8 NI-ZU	2
MP4	8810008660	Screw PH BT M3x8 NI-ZU	7
MP5	8110006640	2047 Cover	1
MP6	8810008450	Screw M4x8 ZK	1
MP9	8110005751	1729 Fan Cover-1	1
MP10	8810009110	Screw M2.6x16 ZK	4
MP13	8930035230	1546 TR-A Clip	1
MP14	8510012210	2047 Main Shield Y445	2
MP15	8930043710	1562 EMER Button (A)	1
MP17	8810007130	Screw H M3x6	4
MP19	8930048350	2146 Lens	3
MP21	8930039612	Thermally Sheet (C)-2 TC100HS (10X10)	1
MP22	8930049650	Thermally Sheet (H)	2
MP23	8930053472	Thermally Sheet (R)-2 TC200HS (10X10)	3
MP24	8930055051	Thermally Sheet (V)-1 TC400HS (10X15)	1
MP26	8510014251	2506 M-Plate-1	1
MP27	8930037120	1647 M-Holder	1
MP28	8930056781	2506 YGR Plate-1 Y938A	1
MP29	8510014241	2506 ANT Plate-1	1
MP36	8310053110	2506 NAME PLATE	1
W1	8900010890	OPC-1115	1
W2	8900010890	OPC-1115	1
W3	8900011950	OPC-1224	1

[MAIN UNIT]

REF.NO.	ODER NO.	DESCRIPTION	QTY.
MP30	8930014140	Earth Spring (D)	1
MP39	8930054521	Shield Sponge (E)-1	1
MP64	8930056580	Spacer (AD)	4
MP65	8810007130	Screw H M3x6	4
MP70	8930001170	Earth Spring (A) FX294	1
W1330	8900011960	OPC-1216	1

[LOGIC-1 UNIT]

REF.NO.	ORDER. NO.	DESCRIPTION	QTY.
MP6	8930001170	Earth Spring (A)	1

Screw abbreviations BT: Self-tapping
NI-ZU: Nickel-zinc
ZK : Black

[ACCESSORIES]

REF.	ORDER. NO.	DESCRIPTION	QTY.
MC1	Optional product	Microphone HM-118N	1
SP1	Optional product	Speaker SP-22	1
P1	5610000270	Connector ALA651B	1
W1	Optional product	Cable OPC-345	1
W2	8900010930	Cable OPC-1127	1
W3	8900010550	Cable OPC-1069	1
MP1	8930055180	Self-adhesive rubber feet	1

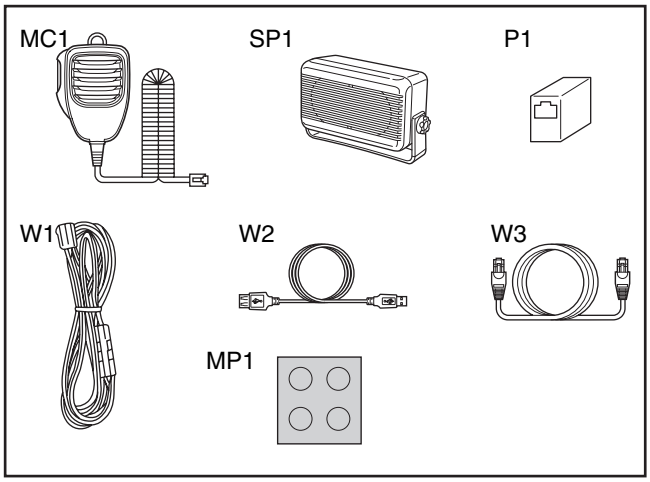

8-2 RC-24

[CHASSIS PARTS]

REF.NO.	ODER NO.	DESCRIPTION	QTY.
DS1	5030002180	TSC0712-UFTDHW	1
EP2	8930048320	SRCN-2140-SP-N-W	2
MP1	8210015740	2140 Front Panel	1
MP2	8930047980	2140 LCD Holder	1
MP3	8930048290	2140 LCD Filter	1
MP4	8210015770	2140 Reflector	1
MP7	8610009840	Knob N234	1
MP9	8810008760	Screw PH BT M2x8 NI-ZU	5
MP10	8930038230	1765 Rear Seal	1
MP12	8810009060	Screw M3x6 ZK	4
MP13	8210013160	1765 Front Panel	1
MP16	8820000871	1705 Cap Screw-1	3
MP18	8310053110	2506 NAME PLATE	1
MP19	8930059370	2140 Front Key (C)	1
W1	8900010940	OPC-1119	1

[FRONT UNIT]

REF.NO.	ODER NO.	DESCRIPTION	QTY.
J1	6450001470	95003-2881	1
S21	2250000270	RH90N74E20-16F-1738	1

Screw abbreviations BT: Self-tapping
NI-ZU: Nickel-zinc
ZK : Black

[ACCESSORIES]

REF.	ORDER. NO.	DESCRIPTION	QTY.
W1	Optional product	Cable OPC-647	1
MP1	8010016470	1765 mounting braket	1
MP3	8810000470	Screw PH M5x12(+-)	4
MP4	8810000950	Screw AO M5x16	4
MP5	8850000150	Flat washer M5 NI BS	4
MP6	8850000390	Spring washer M5	4
MP7	8830000120	Nut M5	4
MP9	8820000910	Screw 1765 SCREW	2

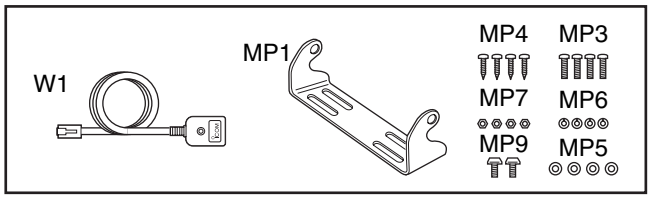

● **ID-1**

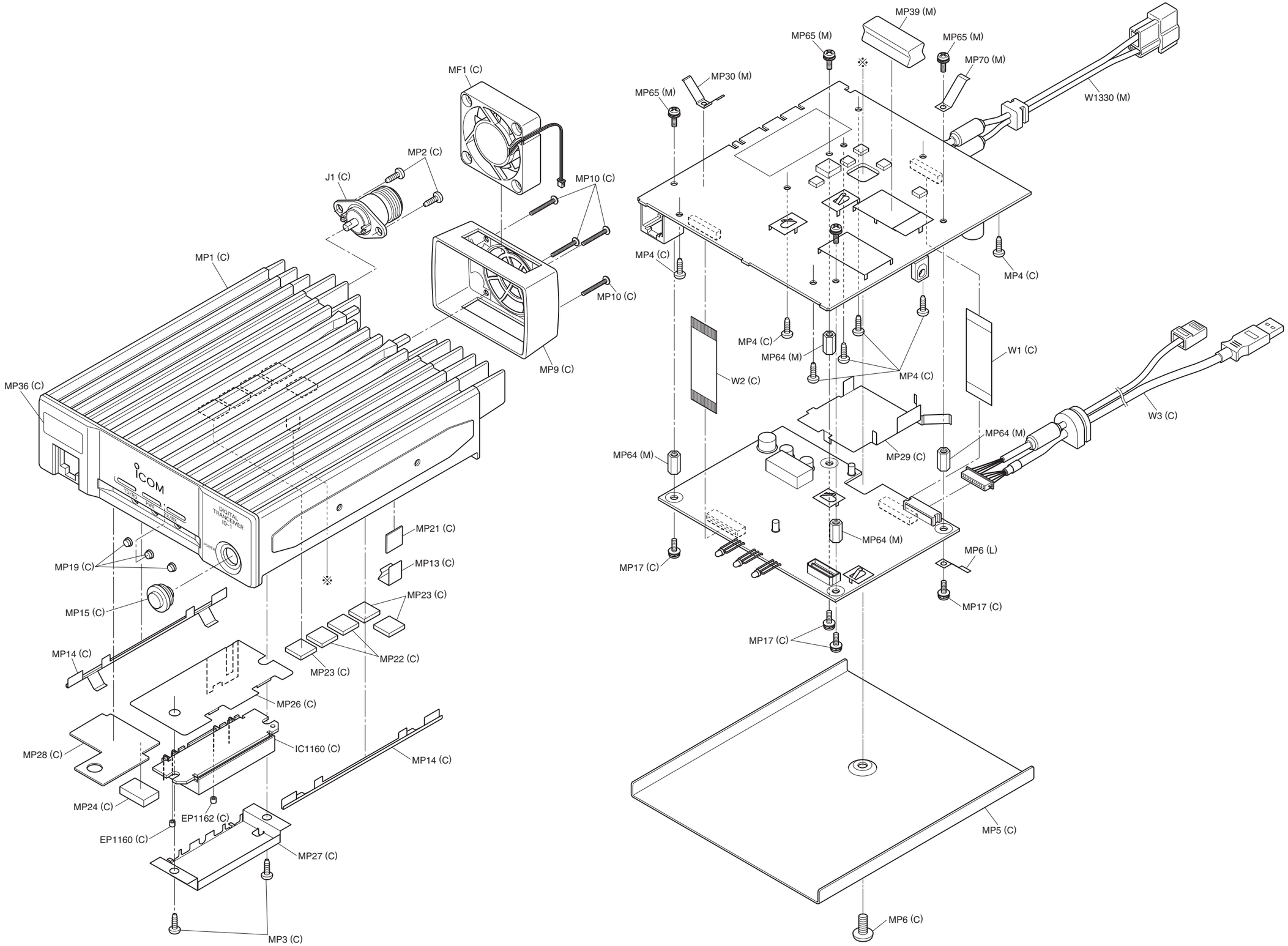
MP39 (M)
MP65 (M)
MP65 (M)
MP70 (M)
MP30 (M)
MP65 (M)
W1330 (M)
MF1 (C)
MP2 (C)
J1 (C)
MP10 (C)
MP1 (C)
MP4 (C)
MP4 (C)
MP10 (C)
MP4 (C)
MP64 (M)
W1 (C)
MP4 (C)
W2 (C)
MP36 (C)
W3 (C)
MP64 (M)
MP29 (C)
MP64 (M)
MP21 (C)
MP13 (C)
MP64 (M)
MP6 (L)
MP19 (C)
MP17 (C)
MP17 (C)
MP15 (C)
MP23 (C)
MP17 (C)
MP14 (C)
MP22 (C)
MP23 (C)
MP26 (C)
MP28 (C)
IC1160 (C)
MP14 (C)
MP24 (C)
EP1162 (C)
EP1160 (C)
MP27 (C)
MP5 (C)
MP3 (C)
MP6 (C)

● **RC-24**

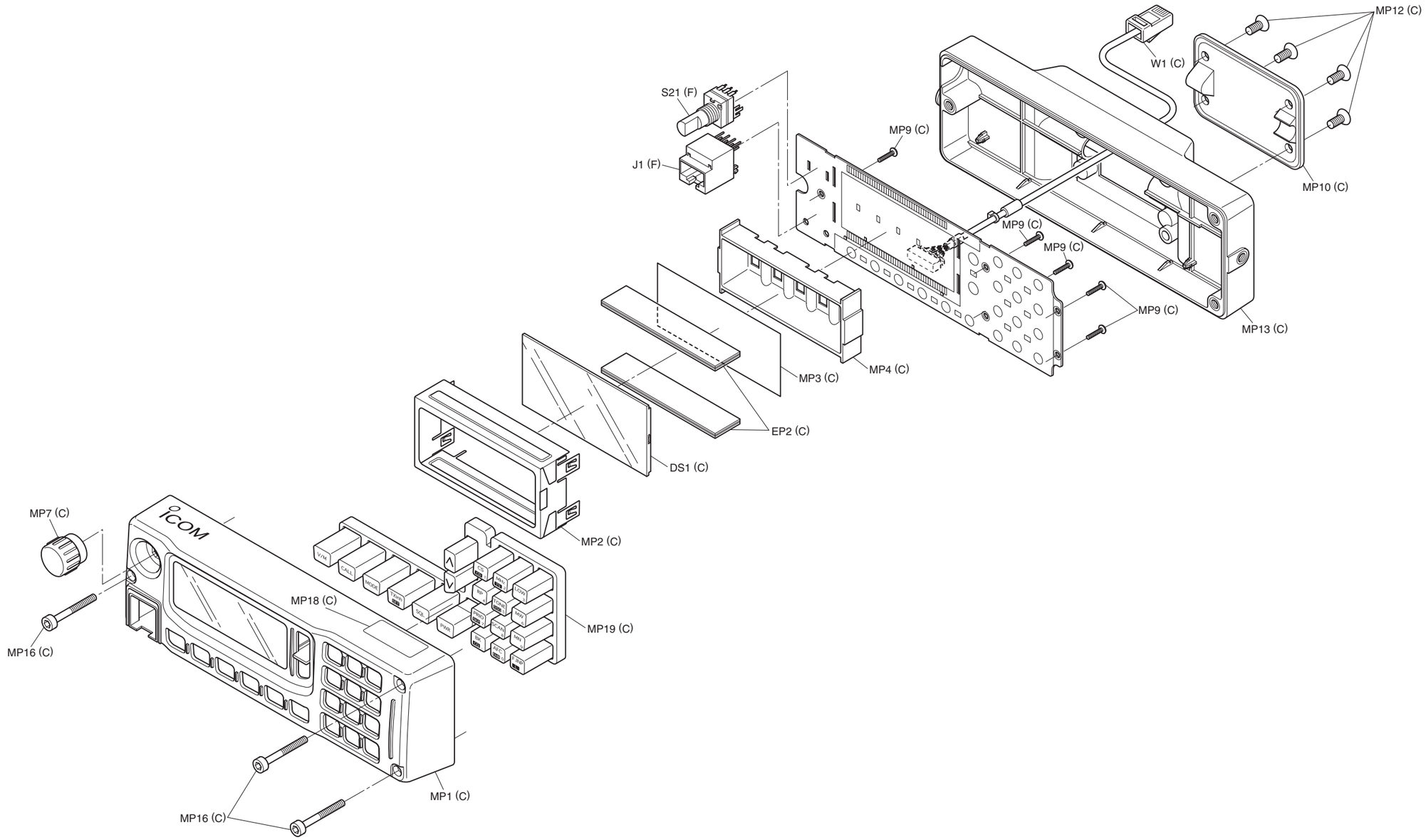
MP12 (C)
W1 (C)
S21 (F)
MP9 (C)
J1 (F)
MP10 (C)
MP9 (C)
MP9 (C)
MP9 (C)
MP13 (C)
MP3 (C)
MP4 (C)
EP2 (C)
DS1 (C)
MP7 (C)
MP2 (C)
MP18 (C)
MP19 (C)
MP16 (C)
MP1 (C)
MP16 (C)

SECTION 9 BOARD LAYOUTS

9-1 MAIN UNIT

- **TOP VIEW**

J1800
to LOGIC-1 unit J401
30

BEEP	FANC	GND	GND	NC	HV_L	HV_L	NC	GND	GND	GND	GND	GND	GND	GND	PCON
AMUT	VCTL	TXS	RXS	+3	NC	NC	GND	GND	GND	GND	GND	GND	GND	GND	PWRS

1

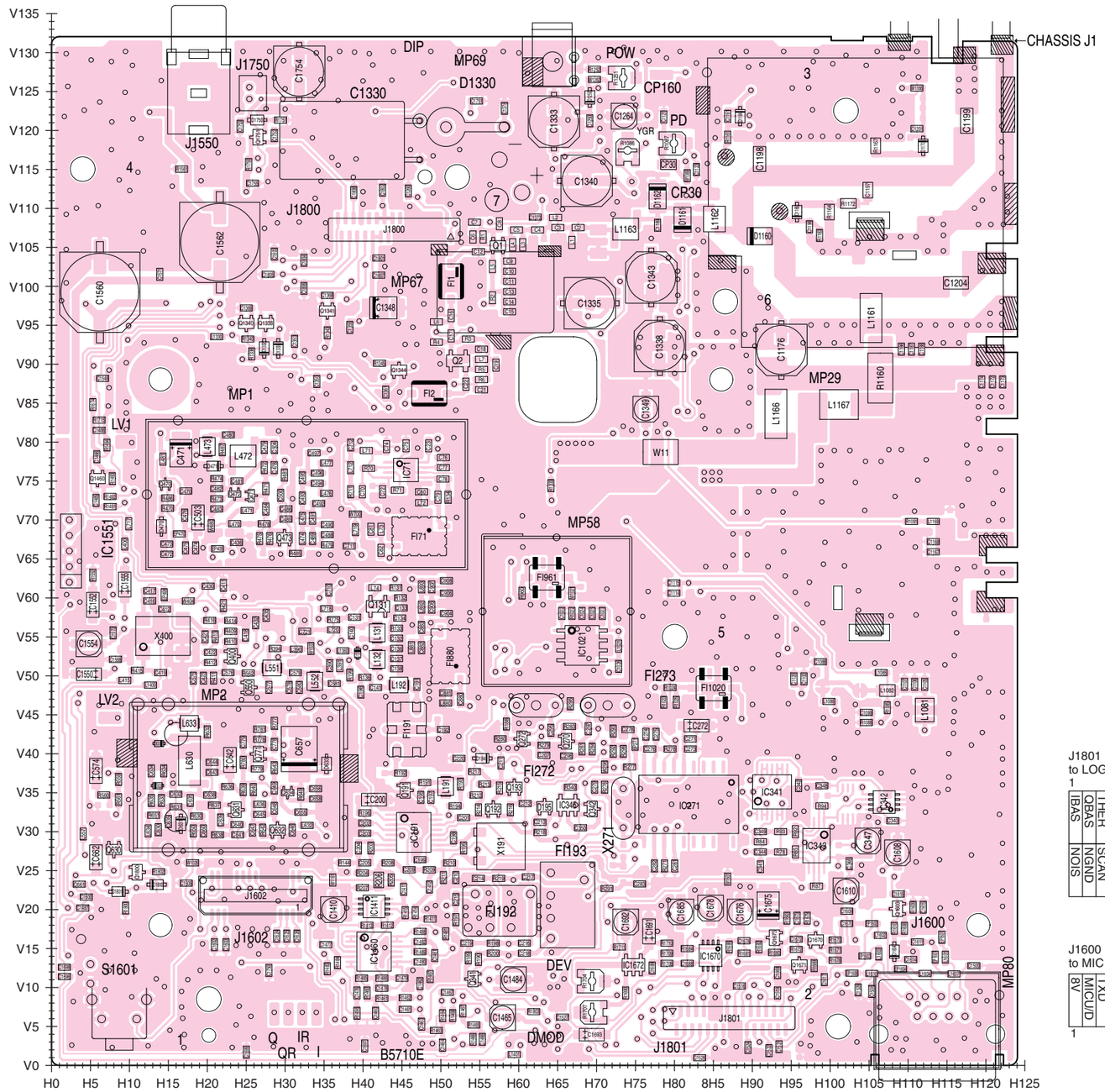

J1602
to LOGIC-1 unit J101
16 30

SHIFT	UNLK	GND	GND	PSCK	PDAT	P2RS	P2ST	GND	GND	GND	GND	GND	GND	TXSW	DAF
POWRS	1FCN	PTST	GND	GND	GND	GND	GND	GND	GND	GND	GND	GND	GND	GND	GND

15 1

J1801
to LOGIC-1 unit J400
1

IBAS	QBAS	THER	THE	ADSW	GND	GND	MGND	MMUT	MRE	+5A	RSSI	CENV	NC	PTT
NOIS	NGND	SCAN	RMUT	DAMOD	TONI	W/NS	GND	GND	MIN	CTCS	TXD	RXD	NC	MU/D

30

J1600
to MIC

8V	MIC/D	TXD	PTT	MICE	MIC	GND	RXD

1 8

● **BOTTOM VIEW**

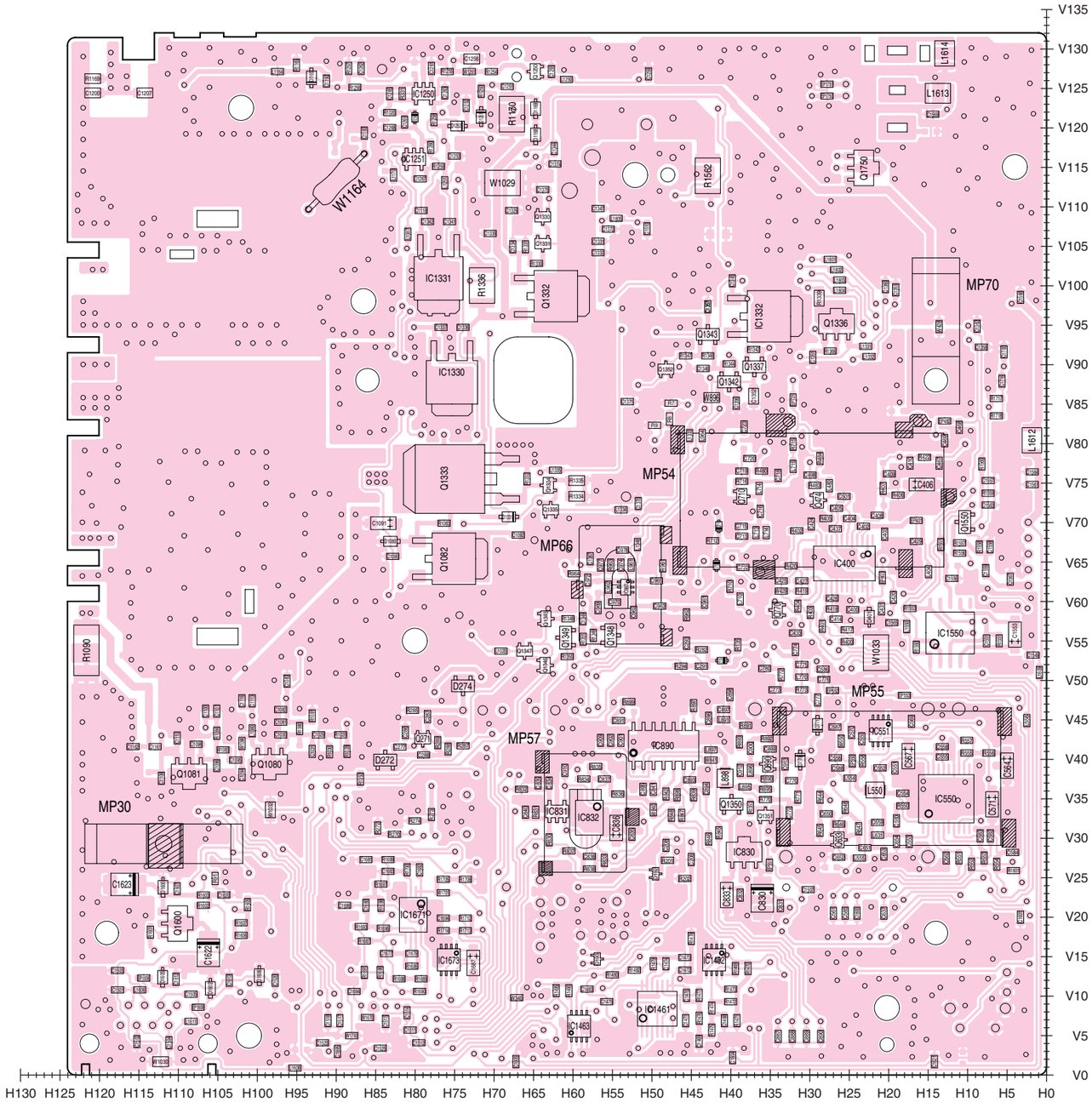
V135
V130
V125
V120
V115
V110
V105
V100
V95
V90
V85
V80
V75
V70
V65
V60
V55
V50
V45
V40
V35
V30
V25
V20
V15
V10
V5
V0
H130 H125 H120 H115 H110 H105 H100 H95 H90 H85 H80 H75 H70 H65 H60 H55 H50 H45 H40 H35 H30 H25 H20 H15 H10 H5 H0
MP70
MP54
MP66
MP55
MP57
MP30
W1164
W1029
IC1331
IC1330
IC1332
Q1332
Q1333
Q1082
Q1336
Q1343
Q1342
Q1337
IC400
IC1550
IC550
IC830
IC832
IC831
IC1673
IC1461
IC1463
Q1081
Q1080
Q1600
C1623
C1622
D274
D272
R1090
L1614
L1613
L1612
L550
W1033

9-2 LOGIC-1 UNIT

- **TOP VIEW**

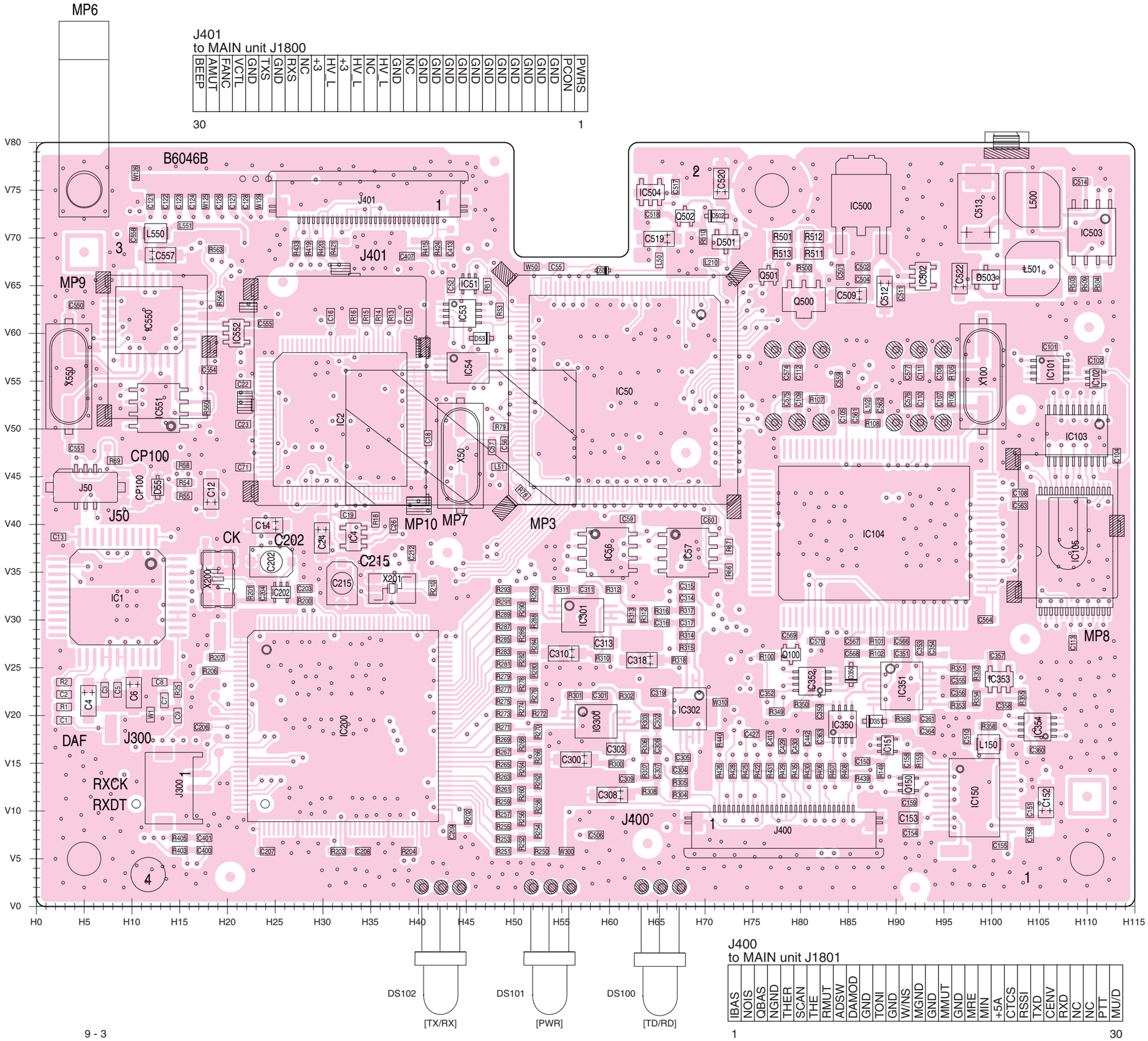

J400
to MAIN unit J1801

IBAS	NOIS	QBAS	NGND	THER	SCAN	THE	RMUT	ADSW	DAMOD	GND	TONI	GND	W/NS	MGND	GND	MMUT	GND	MRE	MIN	+5A	CTCS	RSSI	TXD	CENV	RXD	NC	NC	PTT	MU/D

1 30

● **BOTTOM VIEW**

J100
to ETHERNET/USB connector

NC	USBGD	USBDP	USBDM	USB5V	GND	TD-	RD-	RD+	TD+

10 1

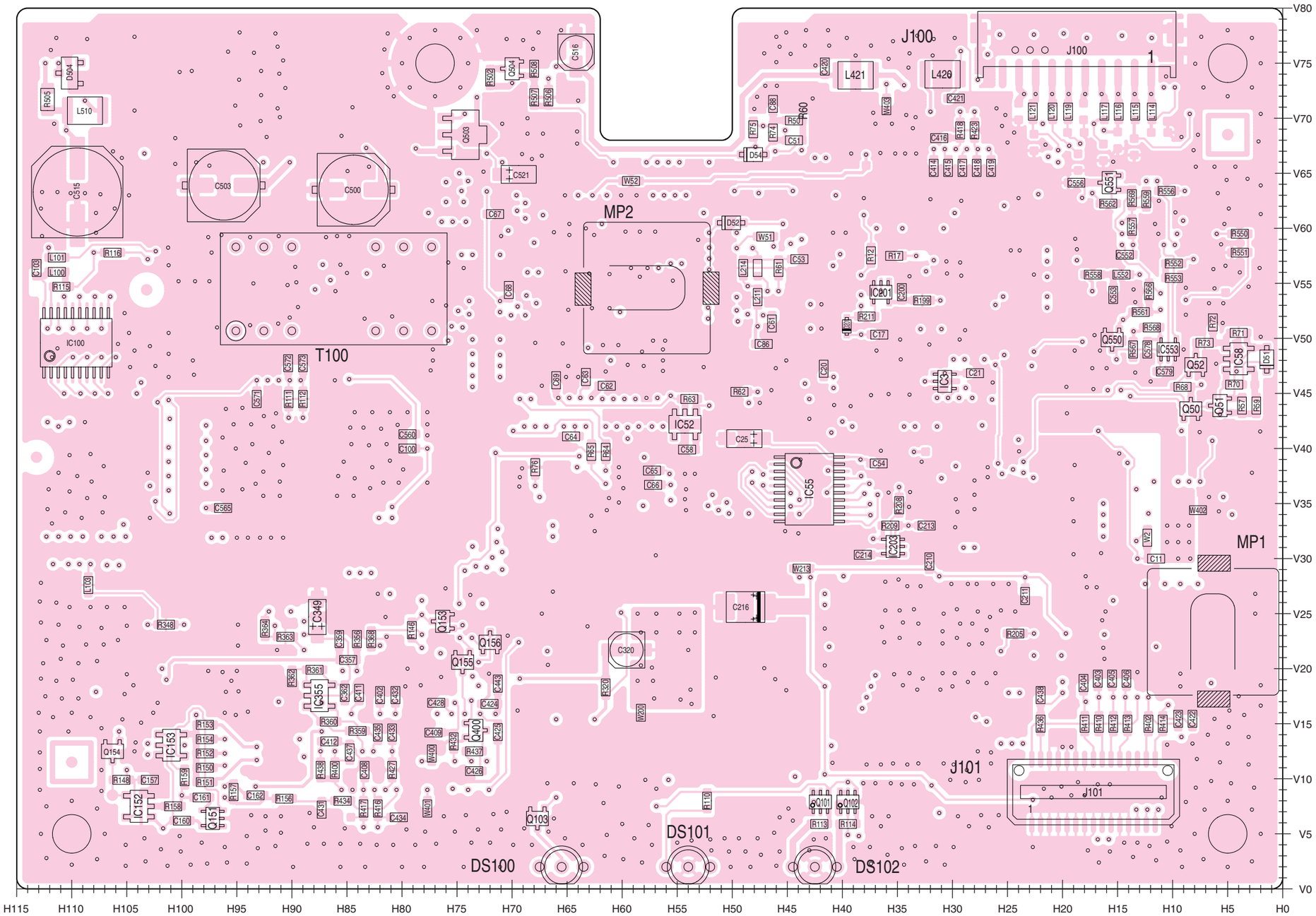
J100
MP2
T100
MP1
J101
DS100
DS101
DS102
IC100
IC55
IC52
IC355
IC153
IC152
IC201
IC553
IC58
IC3
IC203
IC401
Q550
Q51
Q52
Q50
Q153
Q156
Q155
Q400
Q154
Q151
Q103
Q101
Q102
L421
L420
L510
C503
C500
C521
C516
C315
C320
C216
C349
D504
D54
D52
R505
R502
R504
R508
R507
R506
R60
R50
R75
R74
R51
R418
R423
R416
R417
R434
R431
R430
R429
R428
R427
R426
R425
R424
R423
R422
R421
R420
R419
R418
R417
R416
R415
R414
R413
R412
R411
R410
R409
R408
R407
R406
R405
R404
R403
R402
R401
R400
R399
R398
R397
R396
R395
R394
R393
R392
R391
R390
R389
R388
R387
R386
R385
R384
R383
R382
R381
R380
R379
R378
R377
R376
R375
R374
R373
R372
R371
R370
R369
R368
R367
R366
R365
R364
R363
R362
R361
R360
R359
R358
R357
R356
R355
R354
R353
R352
R351
R350
R348
R320
R209
R208
R205
R199
R211
R17
R12
R61
R63
R62
R76
R65
R64
R110
R113
R114
R115
R116
R111
R112
R157
R158
R159
R160
R161
R162
R156
R148
R150
R151
R152
R153
R154
R155
R158
R159
R160
R161
R162
R163
R164
R165
R166
R167
R168
R169
R170
R171
R172
R173
R174
R175
R176
R177
R178
R179
R180
R181
R182
R183
R184
R185
R186
R187
R188
R189
R190
R191
R192
R193
R194
R195
R196
R197

9-3 RC-24

● **TOP VIEW**

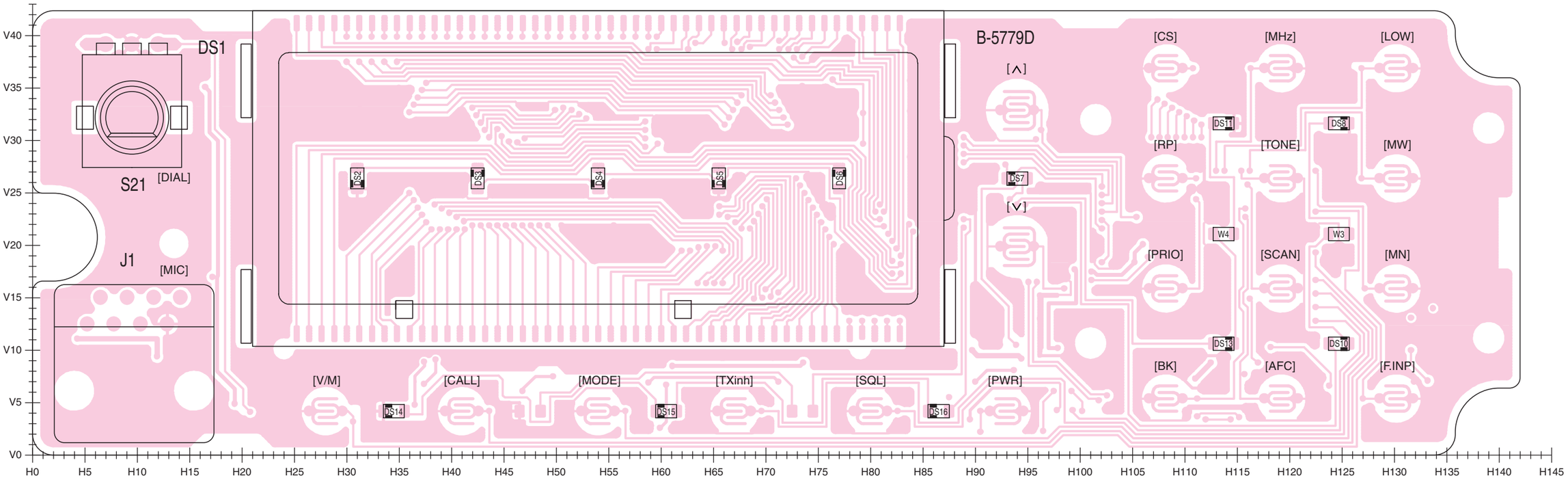

J1
to MIC

8V	MIC/U/D	NC	PTT	MICE	MIC	GND	NC

1 8

● **BOTTOM VIEW**

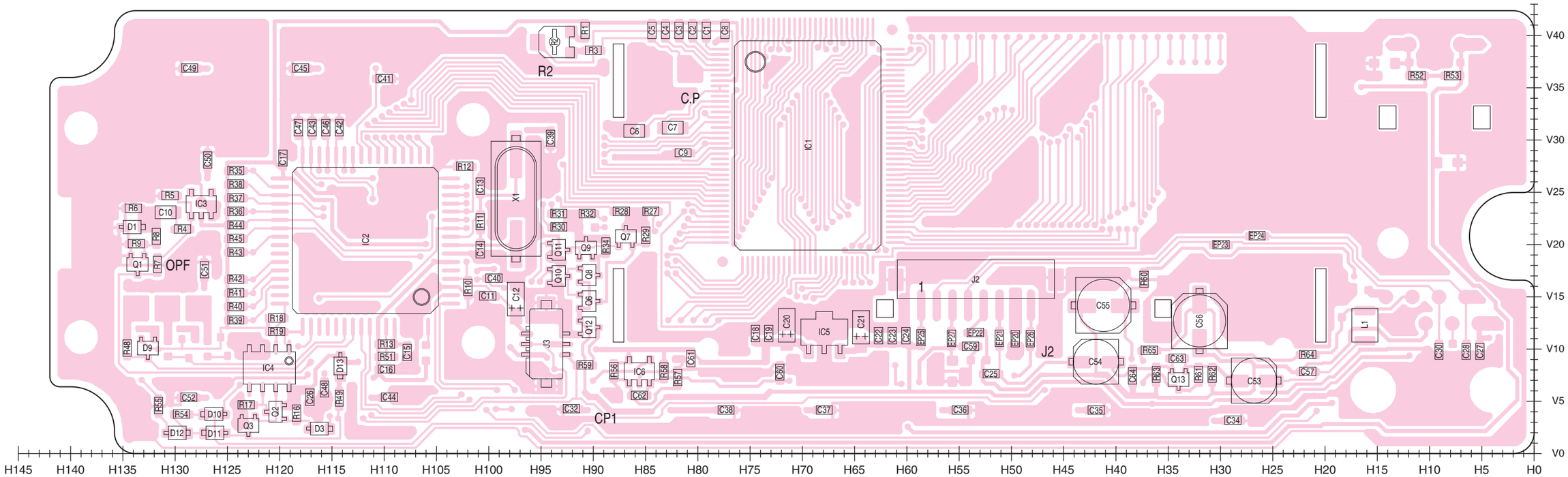

J2
to ID-1 MP80

1	2	3	4	5	6	7	8
8V	MICU/D	TXD	PTT	MICE	MIC	GND	RXD

SECTION 10 BLOCK DIAGRAM

10-1 MAIN UNIT

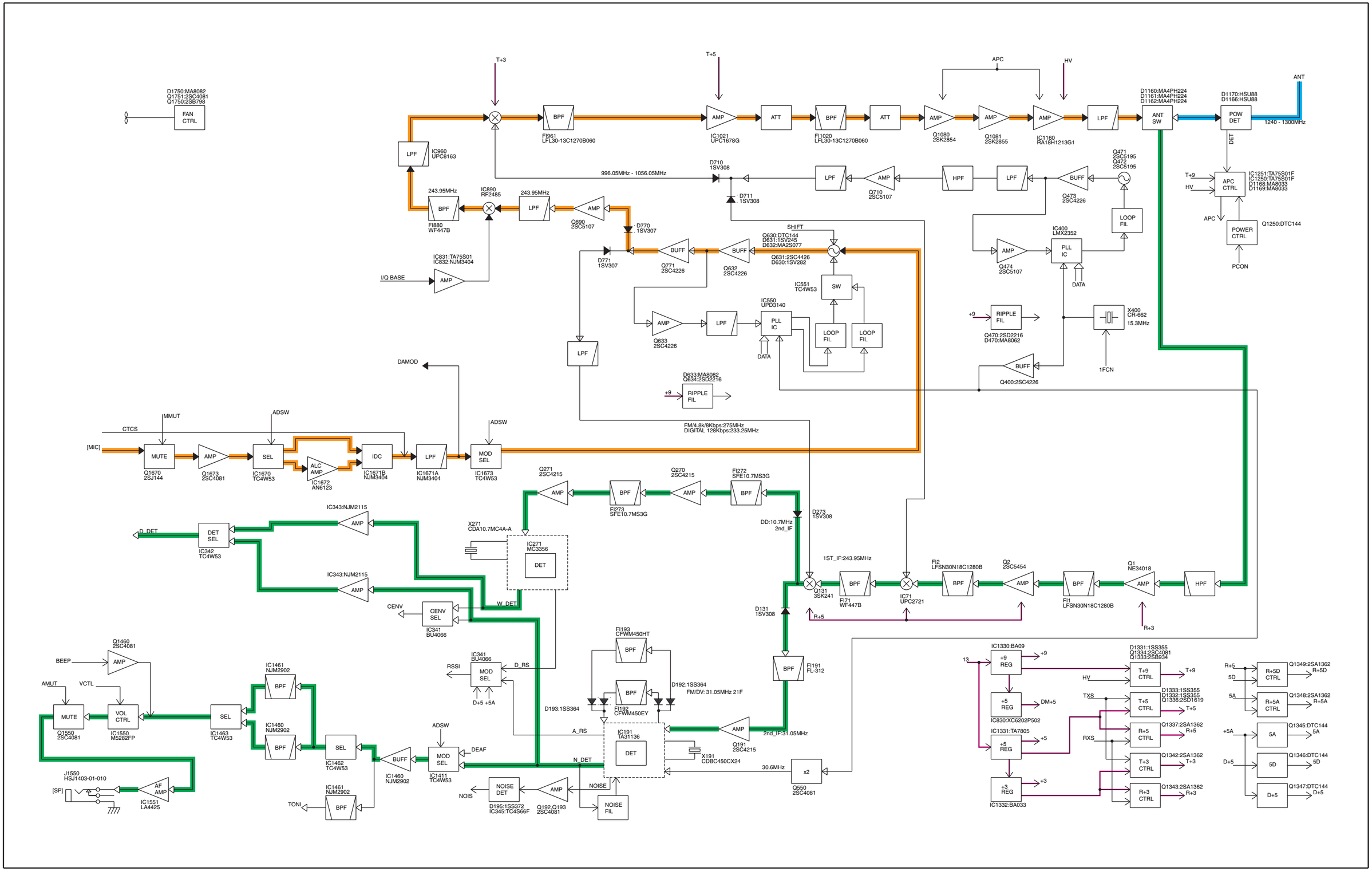

10-2 LOGIC-1 UNIT

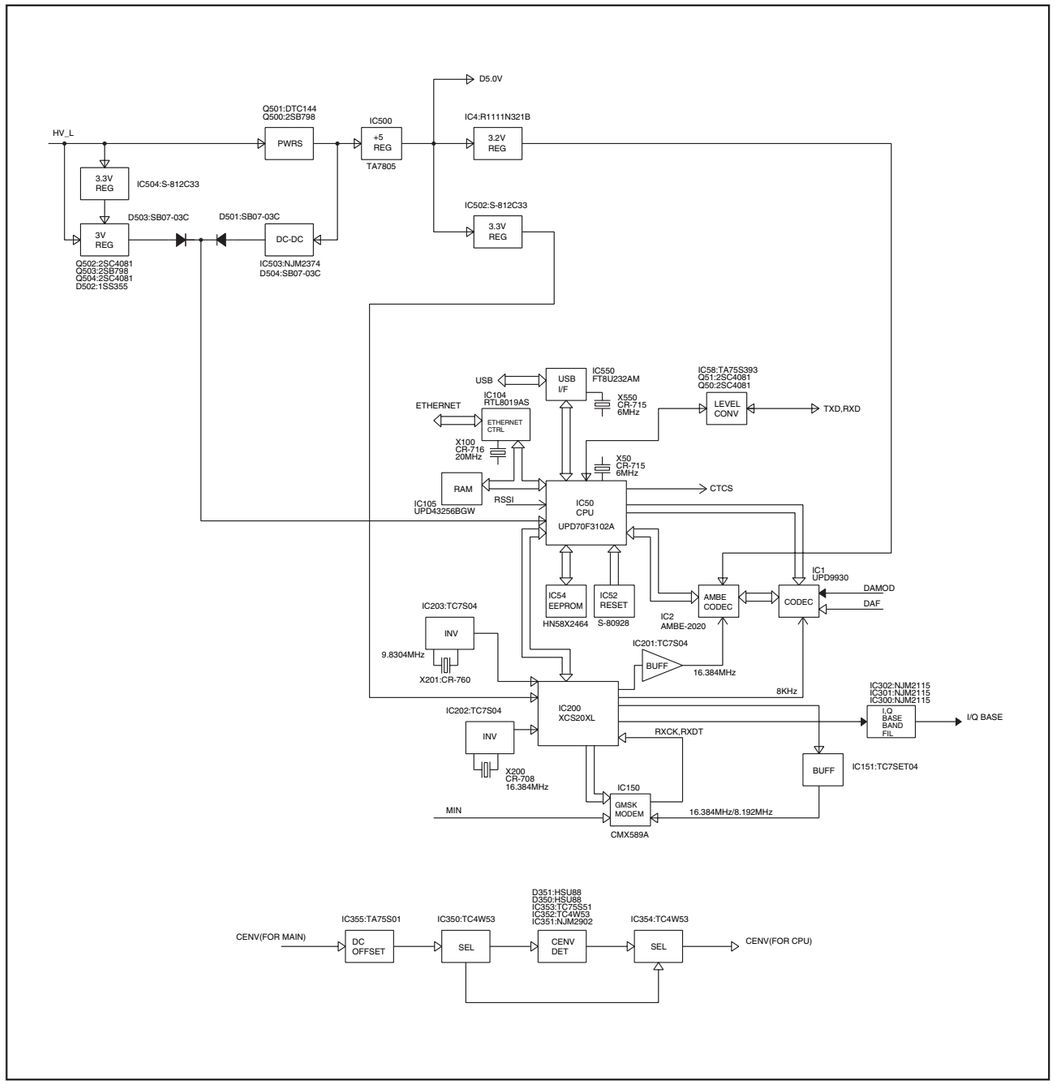

10-3 RC-24

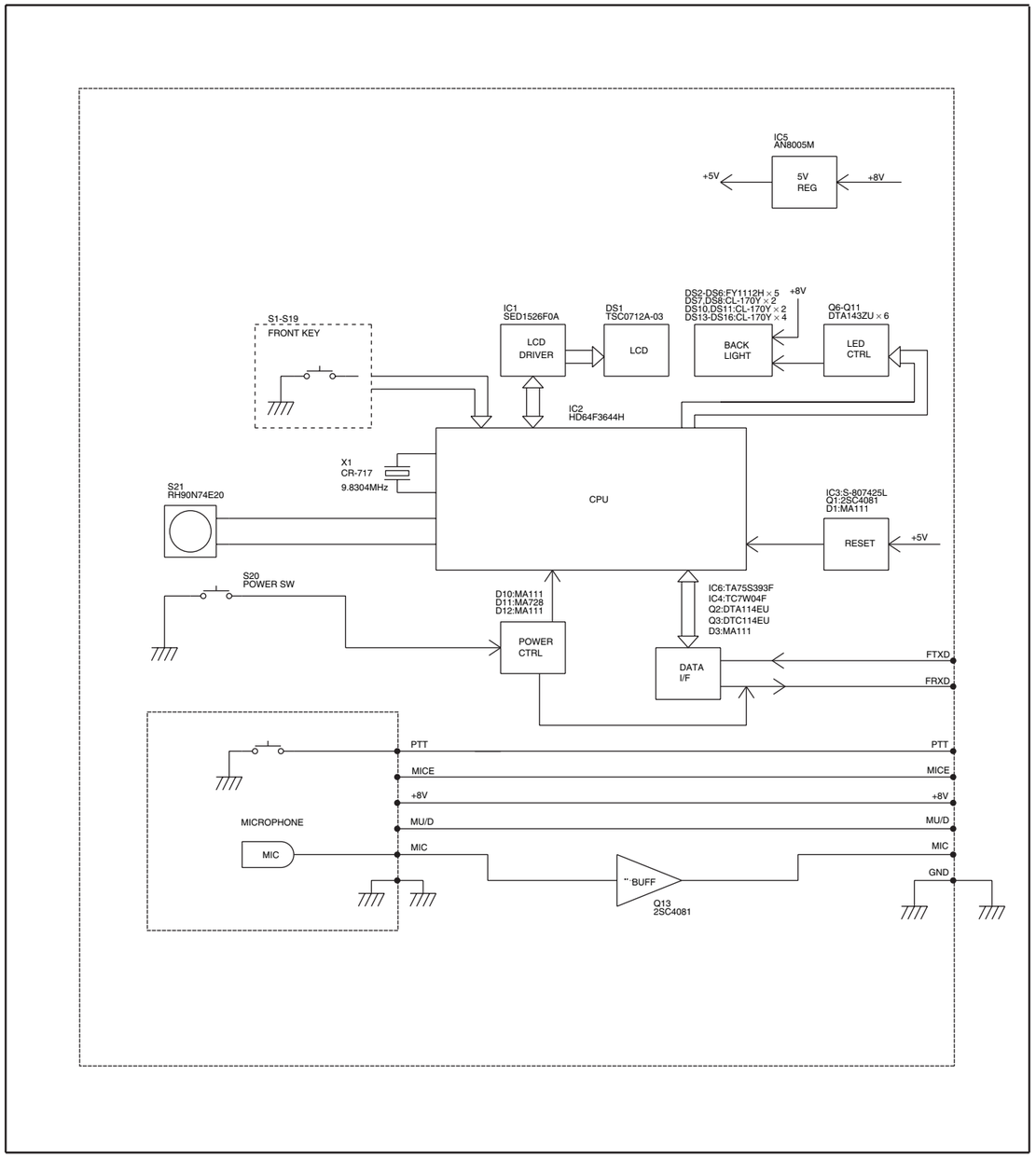

SECTION 11 VOLTAGE DIAGRAM

11-1 MAIN UNIT

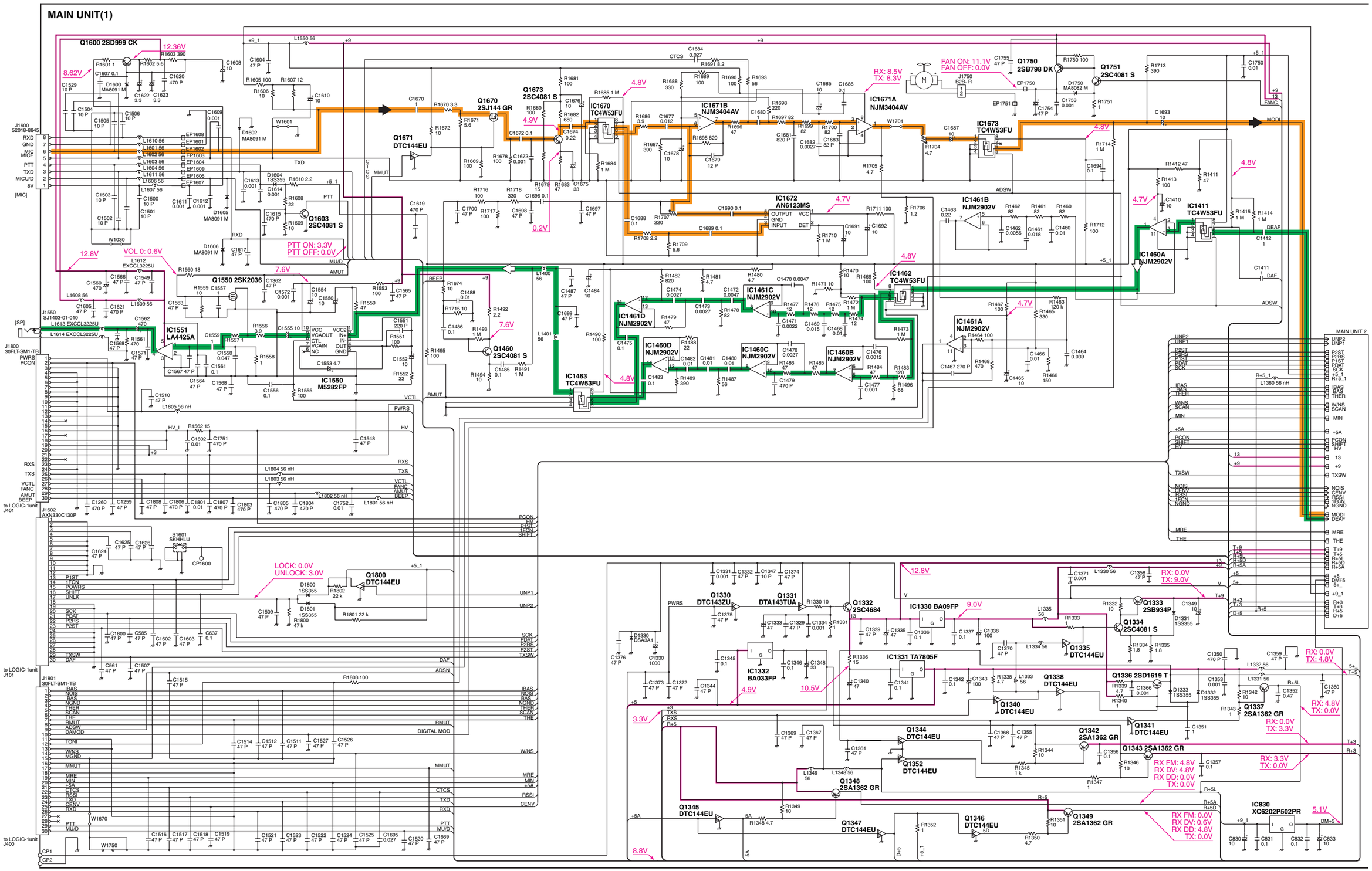

MAIN UNIT(2)

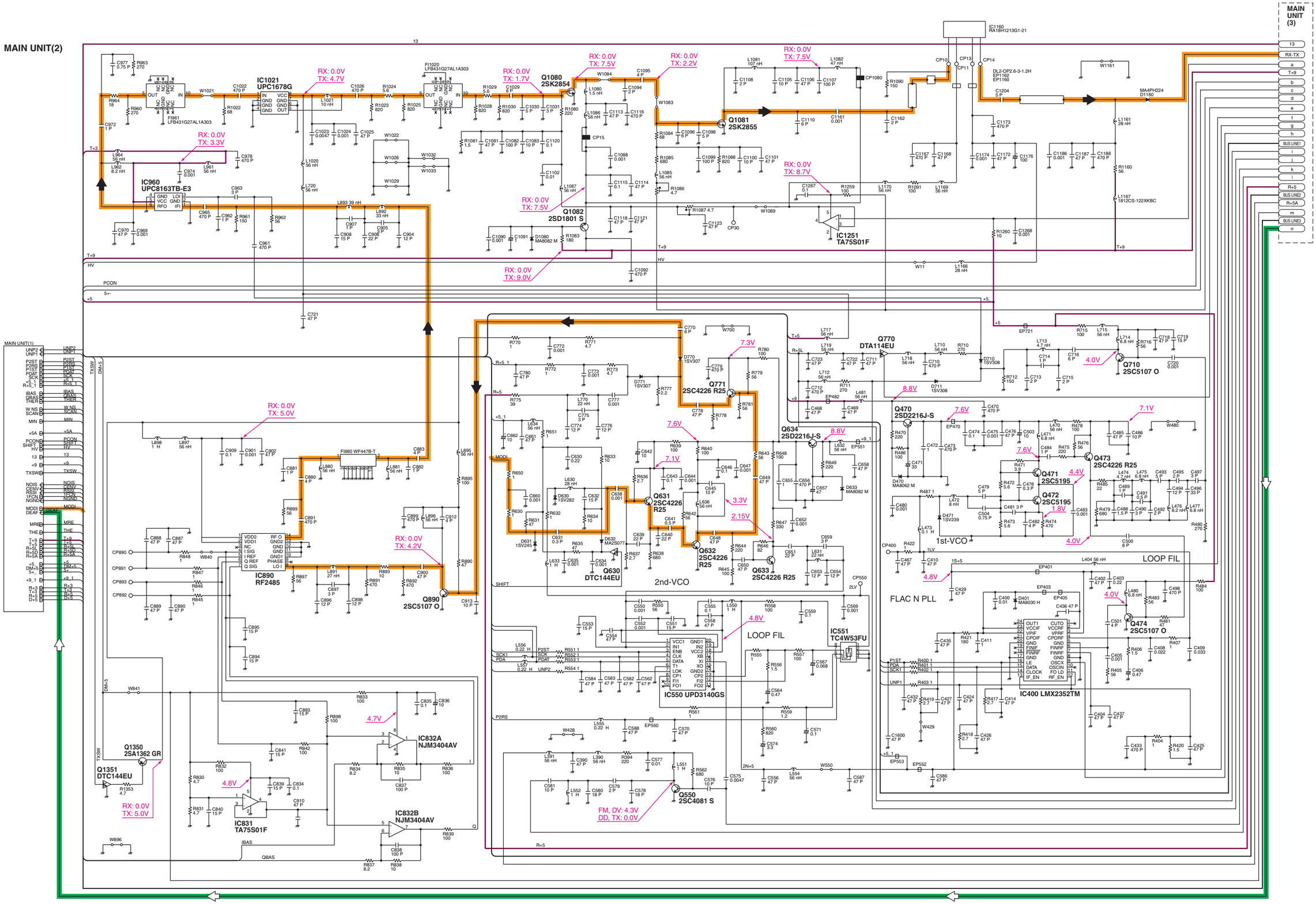
MAIN UNIT (3)
IC1021 UPC1678G
Q1080 2SK2854
Q1081 2SK2855
IC960 UPC8163TB-E3
Q1082 2SD1801 S
IC1251 TA75S01F
IC1160 RA18H1213G1-21
IC890 RF2485
Q890 2SC5107 O
Q1350 2SA1362 GR
Q1351 DTC144EU
IC831 TA75S01F
IC832A NJM3404AV
IC832B NJM3404AV
Q770 DTA114EU
Q771 2SC4226 R25
Q634 2SD2216J-S
Q631 2SC4226 R25
Q632 2SC4226 R25
Q633 2SC4226 R25
Q630 DTC144EU
2nd-VCO
Q550 2SC4081 S
IC550 UPD3140GS
IC551 TC4W53FU
LOOP FIL
Q470 2SD2216J-S
Q471 2SC5195
Q472 2SC5195
Q473 2SC4226 R25
1st-VCO
FLAC N PLL
IC400 LMX2352TM
Q474 2SC5107 O
Q710 2SC5107 O
RX: 0.0V TX: 4.7V
RX: 0.0V TX: 1.7V
RX: 0.0V TX: 7.5V
RX: 0.0V TX: 2.2V
RX: 0.0V TX: 7.5V
RX: 0.0V TX: 3.3V
RX: 0.0V TX: 8.7V
RX: 0.0V TX: 7.5V
RX: 0.0V TX: 9.0V
RX: 0.0V TX: 5.0V
RX: 0.0V TX: 4.2V
RX: 0.0V TX: 5.0V
FM, DV: 4.3V DD, TX: 0.0V
MAIN UNIT(1)

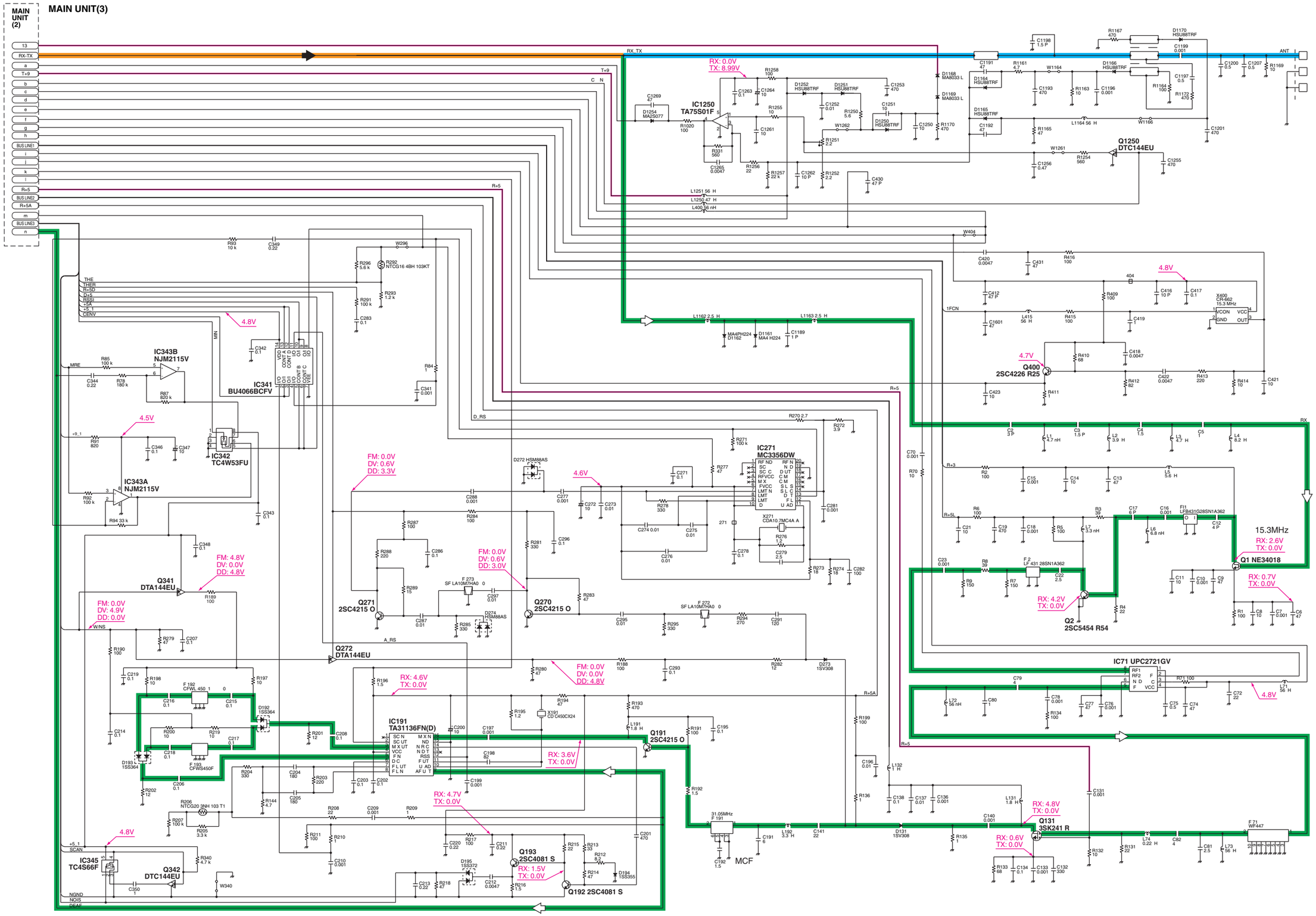
MAIN UNIT(3)
MAIN UNIT (2)
IC1250 TA75S01F
Q1250 DTC144EU
IC343B NJM2115V
IC341 BU4066BCFV
IC342 TC4W53FU
IC343A NJM2115V
IC271 MC3356DW
Q341 DTA144EU
Q271 2SC4215 O
Q270 2SC4215 O
Q272 DTA144EU
IC191 TA31136FN(D)
Q191 2SC4215 O
Q193 2SC4081 S
Q192 2SC4081 S
IC345 TC4S66F
Q342 DTC144EU
Q400 2SC4226 R25
Q2 2SC5454 R54
Q1 NE34018
IC71 UPC2721GV
Q131 3SK241 R
MCF
15.3MHz
RX: 0.0V
TX: 8.99V
FM: 0.0V
DV: 0.6V
DD: 3.3V
4.6V
FM: 4.8V
DV: 0.0V
DD: 4.8V
FM: 0.0V
DV: 0.6V
DD: 3.0V
FM: 0.0V
DV: 4.9V
DD: 0.0V
RX: 4.6V
TX: 0.0V
FM: 0.0V
DV: 0.0V
DD: 4.8V
RX: 3.6V
TX: 0.0V
RX: 4.7V
TX: 0.0V
RX: 1.5V
TX: 0.0V
4.8V
4.5V
4.7V
RX: 2.6V
TX: 0.0V
RX: 0.7V
TX: 0.0V
RX: 4.2V
TX: 0.0V
RX: 4.8V
TX: 0.0V
RX: 0.6V
TX: 0.0V

11-2 LOGIC-1 UNIT

LOGIC-1 UNIT(1)

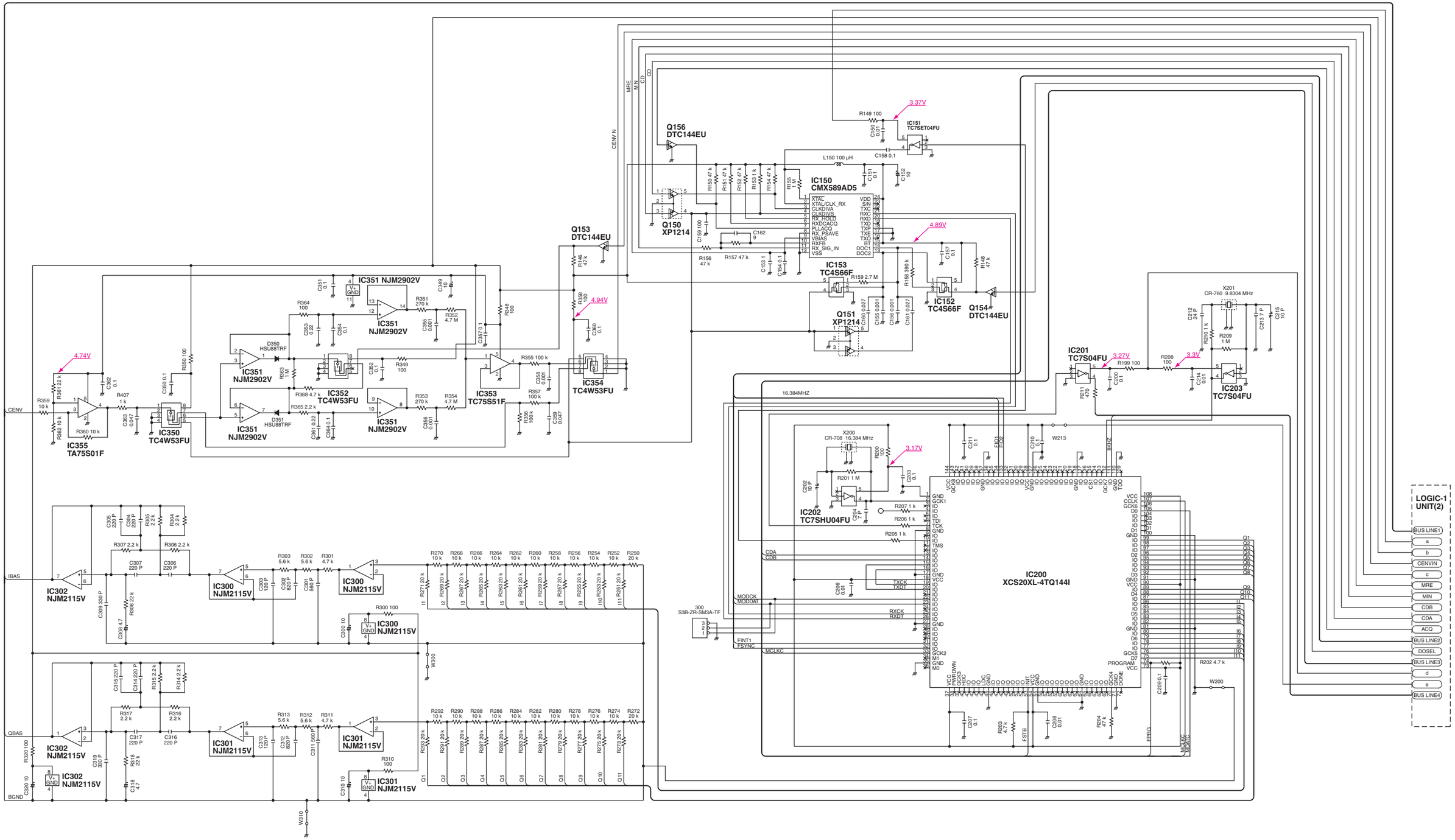

LOGIC-1 UNIT(2)

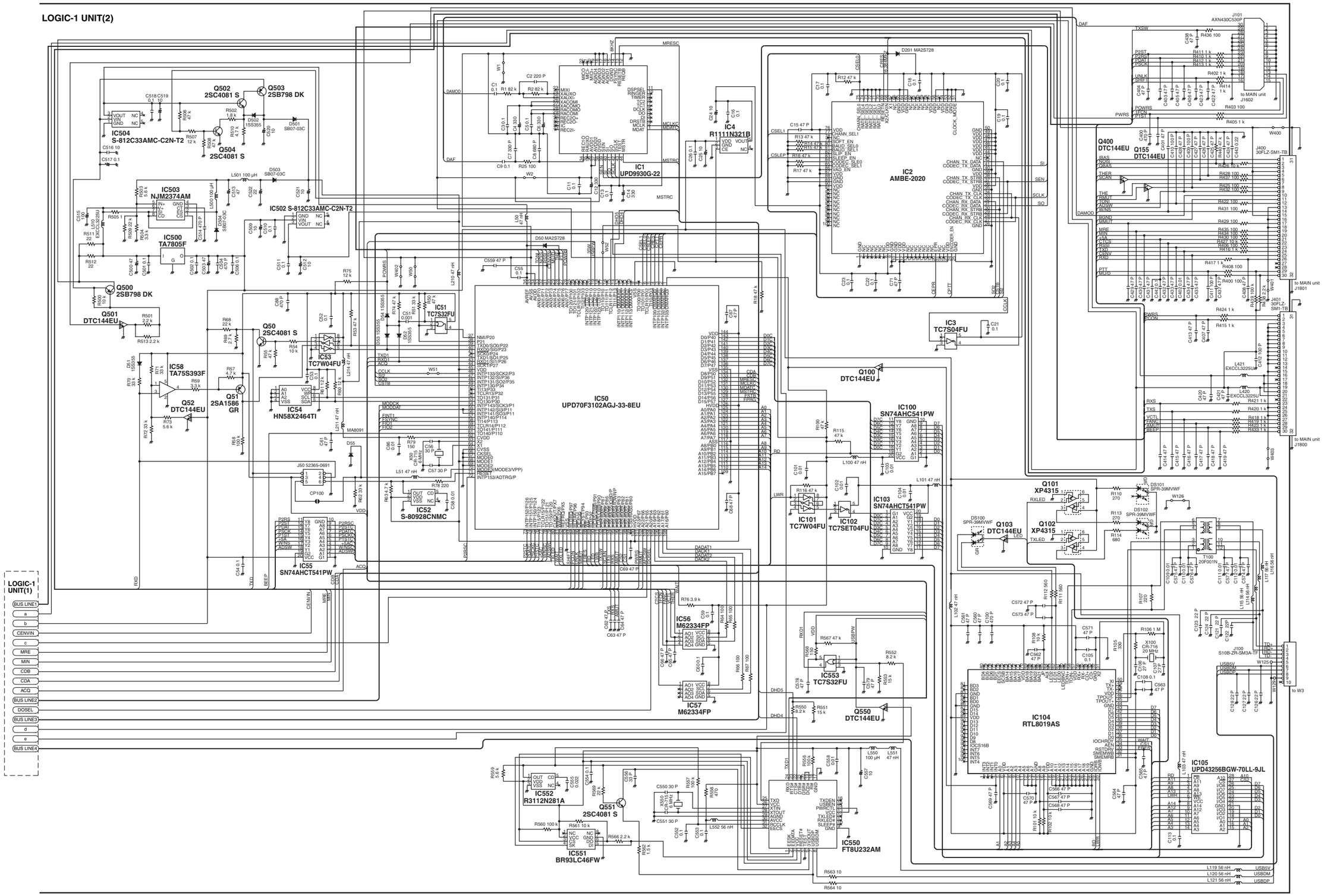

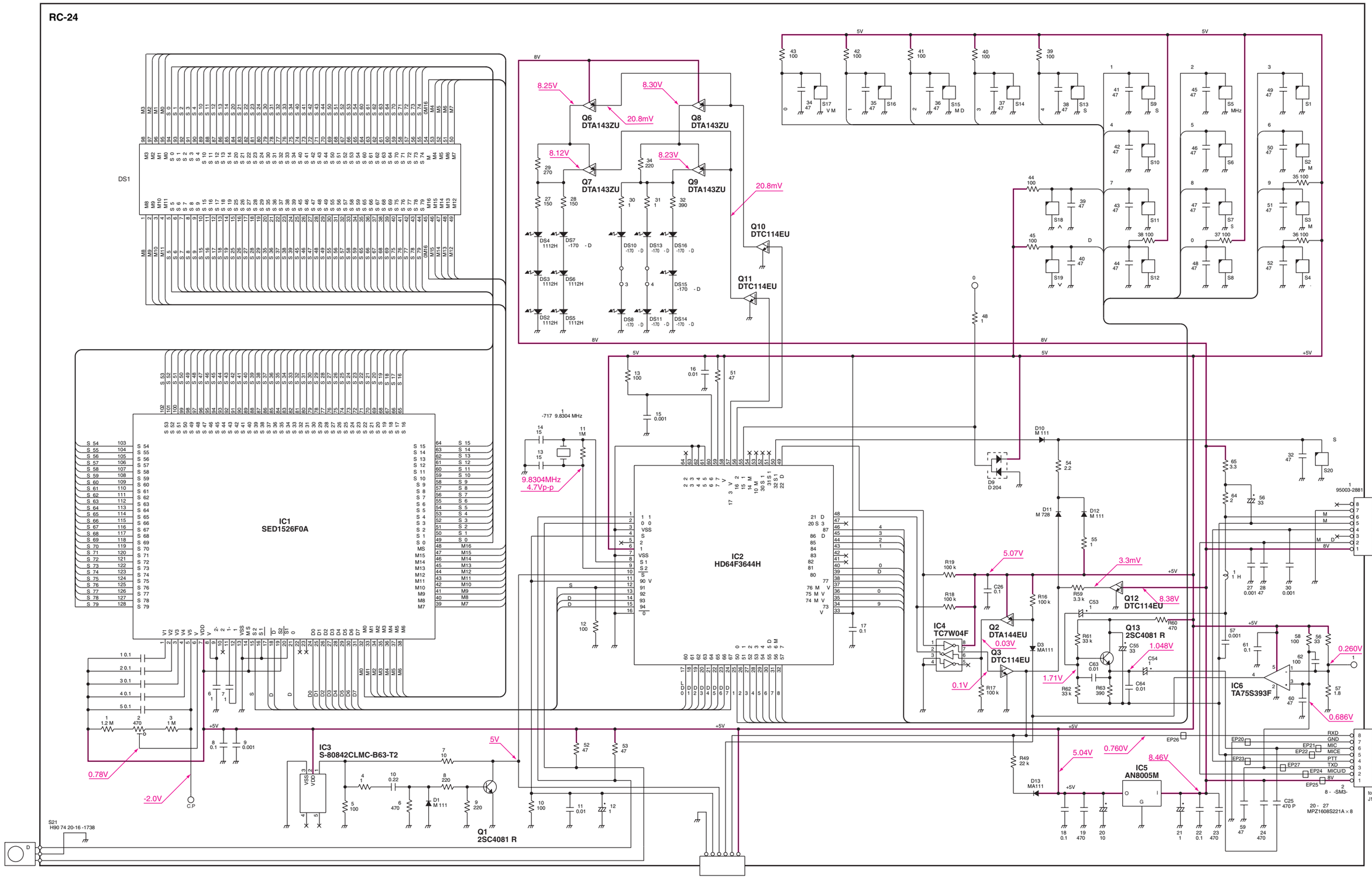
RC-24
DS1
IC1
SED1526F0A
IC2
HD64F3644H
IC3
S-80842CLMC-B63-T2
IC4
TC7W04F
IC5
AN8005M
IC6
TA75S393F
Q1
2SC4081 R
Q2
DTA144EU
Q3
DTC114EU
Q6
DTA143ZU
Q7
DTA143ZU
Q8
DTA143ZU
Q9
DTA143ZU
Q10
DTC114EU
Q11
DTC114EU
Q12
DTC114EU
Q13
2SC4081 R
8.25V
8.30V
20.8mV
8.12V
8.23V
20.8mV
9.8304MHz
4.7Vp-p
5.07V
3.3mV
8.38V
0.03V
1.048V
0.1V
1.71V
0.260V
0.686V
0.78V
-2.0V
5V
5.04V
0.760V
8.46V
S21
H90 74 20-16 -1738
[MIC]
to MAIN unit
J1600
MPZ1608S221A × 8

Icom Inc.

1-1-32, Kamiminami, Hirano-ku, Osaka 547-0003, Japan
Phone : +81 (06) 6793 5302
Fax : +81 (06) 6793 0013
URL : http://www.icom.co.jp/world/index.html

Icom America Inc.
<Corporate Headquarters>
2380 116th Avenue N.E., Bellevue, WA 98004, U.S.A.
Phone : +1 (425) 454-8155 Fax : +1 (425) 454-1509
URL : http://www.icomamerica.com
E-mail : sales@icomamerica.com
<Customer Service>
Phone : +1 (425) 454-7619

Icom Canada
Glenwood Centre #150-6165
Highway 17 Delta, B.C., V4K 5B8, Canada
Phone : +1 (604) 952-4266 Fax : +1 (604) 952-0090
URL : http://www.icomcanada.com
E-mail : info@icomcanada.com

Icom (Australia) Pty. Ltd.
A.B.N. 88 006 092 575
Unit 1 / 103 Garden Road, Clayton VIC 3168 Australia
Phone : +61 (03) 9549-7500 Fax : +61 (03) 9549-7505
URL : http://www.icom.net.au
E-mail : sales@icom.net.au

Icom New Zealand
146A Harris Road, East Tamaki,
Auckland, New Zealand
Phone : +64 (09) 274 4062 Fax : +64 (09) 274 4708
URL : http://www.icom.co.nz
E-mail : inquiries@icom.co.nz

Beijing Icom Ltd.
Room C07, 10th Floor, Long Silver Mansion, No. 88,
Yong Ding Road, Haidian District, Beijing, 100039, China
Phone : +86 (010) 5889 5391/5392/5393
Fax : +86 (010) 5889 5395
URL : http://www.bjicom.com
E-mail : bjicom@bjicom.com

Icom (Europe) GmbH
Communication Equipment
Himmelgeister Str. 100, D-40225 Düsseldorf, Germany
Phone : +49 (0211) 346047 Fax : +49 (0211) 333639
URL : http://www.icomeurope.com
E-mail : info@icomeurope.com

Icom Spain S.L
Crta. de Gracia a Manresa Km. 14,750
08190 Sant Cugat del Valles Barcelona, SPAIN
Phone : +34 (93) 590 26 70 Fax : +34 (93) 589 04 46
URL : http://www.icomspain.com
E-mail : icom@icomspain.com

Icom (UK) Ltd.
Unit 9, Sea St., Herne Bay, Kent, CT6 8LD, U.K.
Phone : +44 (01227) 741741 Fax : +44 (01227) 741742
URL : http://www.icomuk.co.uk
E-mail : info@icomuk.co.uk

Icom France S.a
Zac de la Plaine, 1, Rue Brindejonc des Moulinais
BP 5804, 31505 Toulouse Cedex, France
Phone : +33 (5) 61 36 03 03 Fax : +33 (5) 61 36 03 00
URL : http://www.icom-france.com
E-mail : icom@icom-france.com

Asia Icom Inc.
6F No.68, Sec. 1 Cheng-Teh Road, Taipei, Taiwan, R.O.C.
Phone : +886 (02) 2559 1899 Fax : +886 (02) 2559 1874
URL : http://www.asia-icom.com
E-mail : sales@asia-icom.com

Icom Polska
Sopot, 3 Maja 54 Poland
Phone : +48 (58) 550 7135 Fax : +48 (58) 551 0484
E-mail : icompolska@icompolska.com.pl

Count on us!

Icom Inc.
1-1-32, Kamiminami, Hirano-ku, Osaka, 547-0003, Japan

S-14120IZ-C1
© 2005 Icom Inc.